PHOTOFACT* Folder

*TRADE MARK

AMPEX MODELS
952, 954, 960

AMPEX MODELS
952, 954, 960

GENERAL INFORMATION

Ampex Models 952, 954, and 960 tape recorders are universal stereophonic recorders and reproducers. The major differences among the models are in the color and in the mounting. Models 952 and 954 have no portable case; Model 960 has a portable case. Models 952 and 960 are grey; Model 954 is beige.

Ampex tape recorders have a feature for changing the heads for two-track and four-track tapes, and an automatic stop that stops the tape at the end of a reel. These recorders can be played at two tape speeds, 7 1/2 ips or 3 3/4 ips.

Two microphone jacks for recording stereo tapes are provided at the right side of the recorder.

Manufactured by:
Ampex Corporation
934 Charter Street
Redwood City, California

This material compiled and published by

HOWARD W. SAMS & CO., INC., INDIANAPOLIS 6, INDIANA

C393

Copyright 1959 • All Rights Reserved

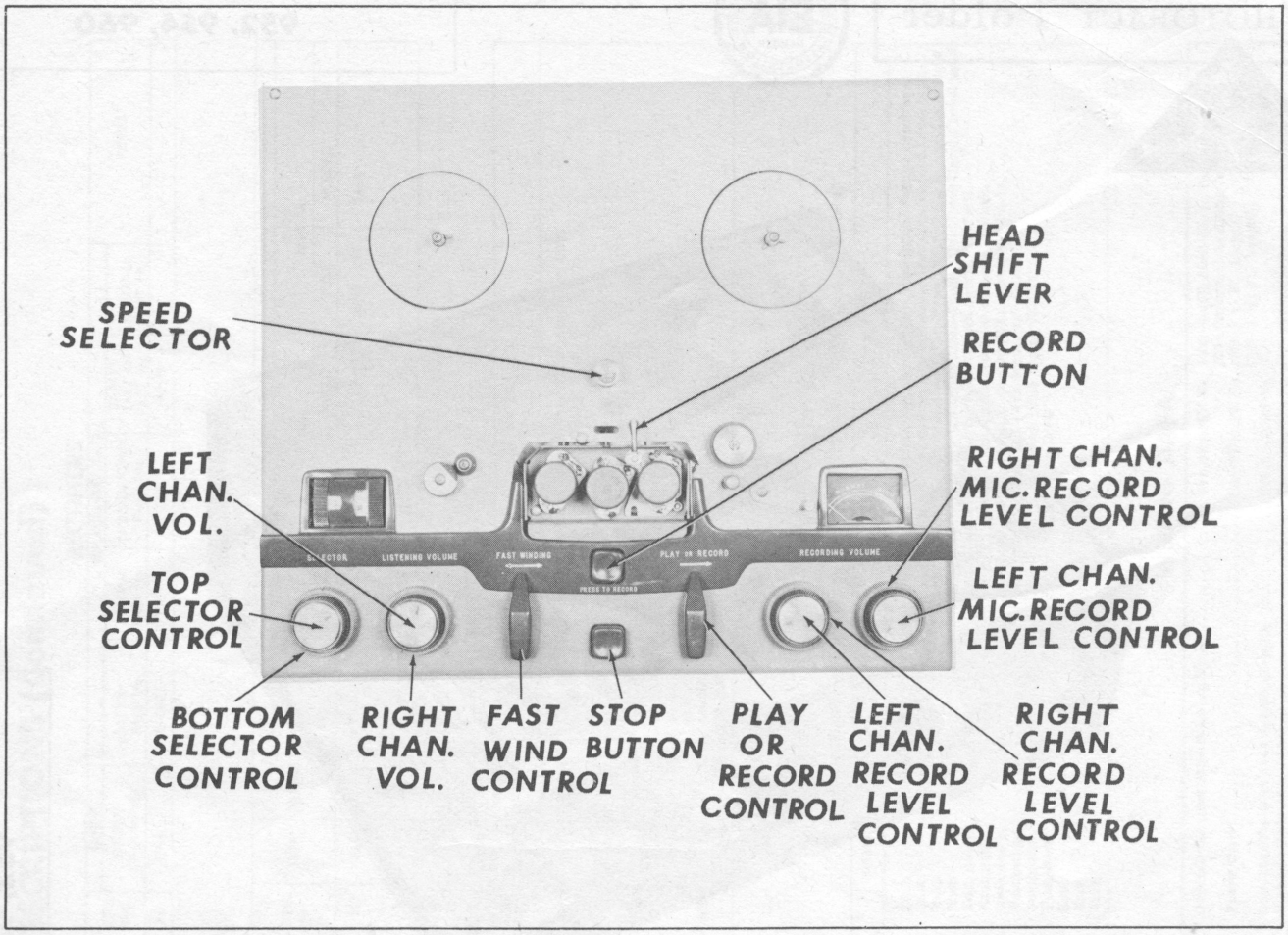

FIG. 1 TOP VIEW OF MECHANISM

SPECIFICATIONS

Heads:

Separate stacked heads for record, playback, and erase. Special two-channel playback head has built-in shift control for accommodating either four-track or two-track tapes.

Rewind Time:

Less than 90 seconds for 1,200-foot reel.

Record Inputs:

High-impedance line input (radio-TV-phono auxiliary), 0.3 volt rms for program level; high-impedance microphone inputs.

Playback Output:

Approximately 1/2 volt rms from cathode follower when program level tapes are being played.

CONTROLS, BUTTONS, AND INDICATORS

Top Selector

Top Selector control turns on the power and selects desired monitor or playback functions.

Bottom Selector

Bottom Selector control selects single or stereo record and the recording level meter for the left or right channel.

Left Channel Volume

Left Channel Volume control adjusts volume of left channel when recorded tapes are being played back.

Right Channel Volume

Right Channel Volume control adjusts volume of right channel when recorded tapes are being played back.

Fast Winding

Fast Winding bar knob quickly moves tape forward or backward.

Stop

Stop button stops tape in any mode and releases Record button when it is locked in the Record position.

Record

Record button places tape recorder in the Record position.

Play-Record

Play-Record bar knob locks the unit in the Play (reproduce) or Record mode.

Left Channel Recording Level

Left Channel Recording Level control adjusts left-channel recording level of radio, phonograph, or tuner.

Right Channel Recording Level

Right Channel Recording Level control adjusts right-channel recording level of radio, phonograph, or tuner.

Left Channel Microphone Recording Level

Left Channel Microphone Recording Level control adjusts left-channel microphone recording level.

Right Channel Microphone Recording Level

Right Channel Microphone Recording Level control adjusts right-channel microphone recording level.

Recording Level Meter

Recording level meter indicates the recording level of the left or right channel as selected by the Bottom Selector control.

Tape Counter

Tape counter indicates the position of the tape.

Speed Control

Speed control button selects tape speeds: up for 7 1/2 ips, down for 3 3/4 ips.

NOTE: Recorder must be on when speeds are changed.

Head Shift

Head Shift control selects tape tracks: down for two-track tape, up for four-track tape.

Automatic Stop

Automatic stop arm automatically stops the tape at the end of a reel.

OPERATING INSTRUCTIONS

Tape Threading

1. Place a reel of tape on the left-hand turntable; Place an empty reel on the right-hand turntable. Be sure the protrusion around the base of each turntable engages the corresponding slots on the reel hub.

2. Thread the tape between tape holdback (9) and tape guide (8), across the tape heads, between capstan idler (4) and capstan (38), and across automatic stop arm (12A). See photograph of unit on the first page for an example of proper tape threading.

NOTE: When the tape is threaded on the unit according to the path described in the foregoing, the top half of the tape is the left channel and the bottom half is the right channel. This statement applies to two-channel stereo tape only. Monaurally, the same tape always records or plays on the top half in a left to right direction. Remembering that the top of the tape is to the left will help the operator remember the position of the controls.

To Record Monaurally with a Microphone

1. Place the Top Selector control and the Bottom Selector control in the single position. If the Bottom Selector control is not put in the single position, the full width of the tape and any program on the reverse half of the tape will be erased.

2. Connect a high-impedance microphone to the left input jack (front jack on the side of the unit).

3. Adjust microphone recording level on recording level meter by using the Left Channel Microphone Level control (Top control).

4. Set tape position indicator (61) at 0-0 with fingertip (move in either direction).

5. Simultaneously, depress Record button and turn Play or Record knob until it clicks into position and holds. Changes in level may be made at any time during a recording by using the Left Channel Microphone Level control (Top control).

NOTE: When stopping the tape, always use the Stop button; never attempt to stop the recorder by using the bar knobs (6).

To Play Back Monaural Tapes

1. Place Top Selector control in single position.

2. Thread tape as described under "Threading Tape."

3. Move Play-Record bar knob clockwise until it clicks into position. Do not depress Record button; depressing it will start tape erasure.

4. Turn Left Channel Volume control to desired sound level.

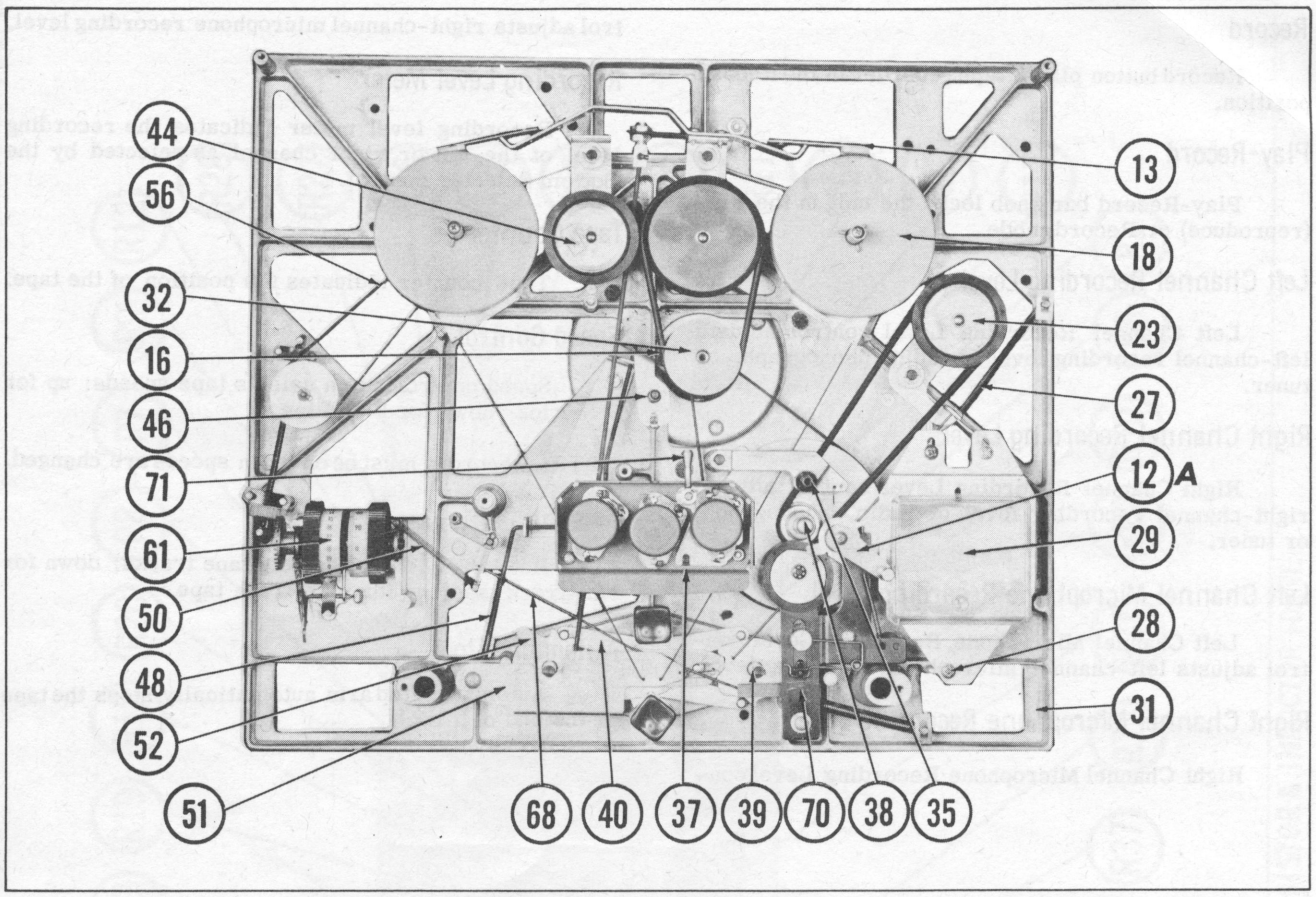

FIG. 2 TOP VIEW OF BASEPLATE WITH COVER ASSEMBLY REMOVED

NOTE: Head shift rod (71) should be down when half-track or two-track stereo tapes are being played back. When four-track stereo tapes are being played back, head shift rod (71) must be up.

To Record Monaurally from Radio, TV, or Phonograph

1. Place Top Selector control and Bottom Selector control in the single position. If the Bottom Selector control is not placed in the single position, the full width of tape or any program on the reverse half of the tape will be erased.

2. Connect cable from source (radio, TV, or phono) to left input at the rear of the recorder.

3. Adjust recording level on the recording level meter by using the Left Channel Recording Level control (Top Control).

NOTE: Left Channel Level control and Left Channel Microphone Recording Level control can be used simultaneously as a mixer control. Thus, live talent can be added with the microphone while a recording is being made from radio, TV, or phonograph.

To Record Two-Channel Stereo with a Microphone

1. Turn Top Selector control to Stereo position.

2. Turn the Bottom Selector control to the Stereo position.

NOTE: The Stereo position on the Bottom Selector control can be either to the right or to the left. In these positions, the recording levels of the two channels are balanced. When the Bottom Selector is in the left position, the recording level meter will indicate the signal strength on the left channel. When the Bottom Selector is in the right position, the recording level meter will indicate the signal strength on the right channel. The Bottom Selector control can be moved between the left and the right positions at any time during a recording without affecting the recording if visual balance checks are desired.

3. Connect one high-impedance microphone to the input jack at the front. This is the left channel.

4. Connect another high-impedance microphone to the input jack at the rear. This is the right channel.

5. Set the tape position indicator to 0—0.

6. Adjust microphone levels as described in the foregoing Note; use the Left Channel Microphone Recording Level control for the left channel, the Right Channel Microphone Recording Level control for the right channel.

7. Simultaneously, depress the Record button and turn the Play-Record bar knob until it clicks into position and holds.

CHASSIS - TOP VIEW

To Record Two-Channel Stereo from Radio, Phonograph, or Another Tape

1. Follow Steps 1 and 2 in "To Record Two-Channel Stereo with a Microphone."

2. Connect cables from source to left and right input jacks at rear of recorder.

3. Adjust recording levels by using recording level meter (29) as a reference and by using procedure outlined in the Note under "To Record Two-Channel Stereo with a Microphone."

4. Simultaneously, depress the Record button and turn the Play-Record control until it clicks into position and holds.

NOTE: The Left Channel Recording Level and Right Channel Recording Level controls, and the Left Channel Microphone Recording Level and the Right Channel Microphone Recording Level controls may be used as mixer controls; thus, live talent may be added with the two microphones to a stereo recording being made from a radio, phonograph, or other tape.

To Record Sound on Sound

First sound-track recording —right channel.

1. Place Top Selector control in Stereo Right (R) position.

2. Connect microphone to right microphone jack (rear jack).

3. Adjust recording level by using the Right Channel Microphone Recording Level control and recording level meter (29) as a reference.

4. Place the unit in the Record mode, and record the first sound track.

5. After the recording is finished, rewind the tape to the start of the first sound track.

Second composite sound track—sound on sound.

1. Set up the Ampex 2012 amplifier/ speaker or its equivalent.

2. Connect the right-channel output of the unit to any input jack of the amplifier/ speaker except to the tape input. (The tape input is the only input not connected to the output jack below labeled "To Tape Recorder Input."

3. Turn the selector knob on the amplifier/ speaker to compare with the chosen input jack.

4. Connect the phono jack labeled "To Tape Recorder Input" on the amplifier/ speaker to the left-channel input on the unit.

CAUTION: With this monitor method, use only enough volume on the amplifier/ speaker that the volume can be heard, but not enough that the line recording is muddied with the microphone pickup of sound through the air.

5. Connect microphone to left-channel jack at the front of the unit.

6. Place Top Selector control in the Stereo position.

7. Place Bottom Selector control in Single position.

8. Place unit in Play mode. Adjust volume with the Right Channel Volume control; adjust the recording level with the Left Channel Recording Level control until normal recording level is indicated on recording level meter (29).

9. Rewind to the start of the first recording.

10. Adjust microphone, which is plugged into left-channel jack (at front), to normal recording level by using Left Channel Microphone Recording Level control.

11. Place unit in Record mode.

The right channel and the recording on the left channel can be heard at the same time. Sound produced through the microphone will be recorded simultaneously with the sound heard on the amplifier/ speaker.

This system retains the original sound on the right channel. If an error is made or if the operator wishes to rerecord, the tape is rewound, the unit is placed in the Record mode, and the new sound is recorded.

DISASSEMBLY INSTRUCTIONS

All servicing except cleaning of the heads, the tape holdback pad, and the capstan idler, and adjustment of the heads requires removal of the unit from the carrying case.

To Remove Tape Transport from Cabinet

1. Remove four screws from bottom of carrying case.

2. Place tape recorder on its side; grip tape transport with your fingers and slide it out.

To Remove Top Cover

1. Remove eight round knobs and two bar knobs.

2. Remove head cover (2) by squeezing the sides and tilting up and back.

3. Remove tape holdback cover (9), tape guide (8), and capstan idler (4).

4. Remove the speed change knob. Remove the set screw with an Allen wrench.

5. Remove two rear cover plate screws (11B) at rear of top cover; remove the screw under the head cover and the two screws (11A) under the knob.

6. Lift the top cover.

7. To reassemble, reverse the foregoing procedure.

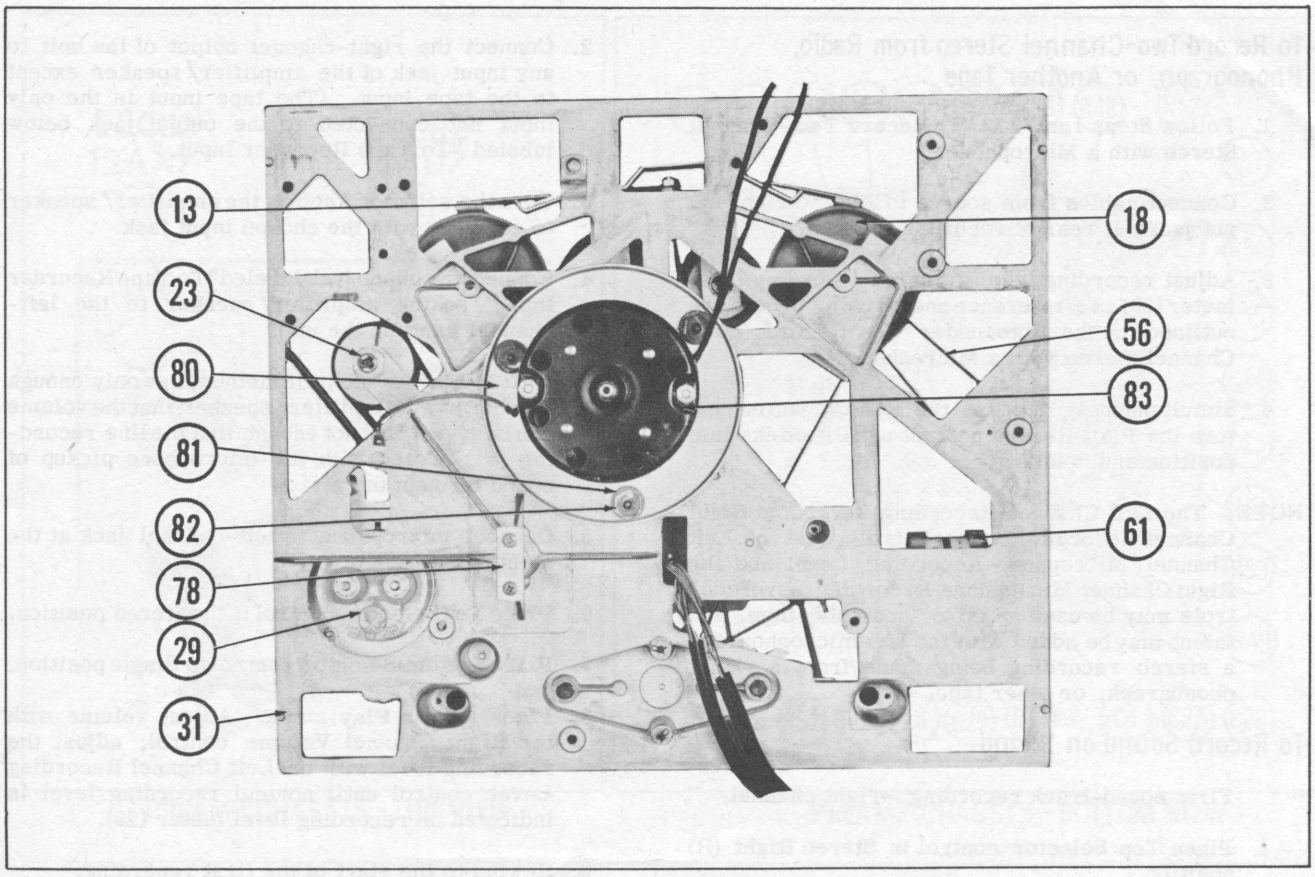

FIG. 3 BOTTOM VIEW OF BASEPLATE

TAPE TRANSPORT PERFORMANCE CHECKS

The mechanical operation of the components of the tape transport is fixed within strict design specifications, and there are no adjustments (except the head assembly, which is aligned during the electronic alignment procedure). However, a few simple checks should quickly determine whether the transport is operating properly or whether corrective maintenance will be required.

Some of the performance checks outlined may be made using alternate methods, depending upon the test equipment required (as detailed at the start of each discussion).

Tape Speed

Test equipment—electronic frequency counter.

1. The most accurate method of measuring tape speed is to reproduce a tape recorded at a frequency between 3,000 and 4,000 cps and to use an electronic frequency counter to determine the reproduced frequency. (A standard flutter tape recorded at 3,000 cps is an example of this type of tape).

NOTE: Tapes recorded on the recorder/reproducer itself and then reproduced will not determine whether the tape is moving at the correct speed.

2. An alternate method of measuring tape speed may be used if an electronic frequency counter is not available. An approximate tape speed indication may be obtained by timing (with a stop watch) the number of seconds a measured length of tape takes to pass a given point on the transport. Measure the tape in multiples of 7 1/ 2 ips, and play the tape for at least one minute.

NOTE: Human error, plus the tendency of stop watches to jump or lag when they are started, make this method rather inaccurate.

Tape Tension

Test equipment—an accurate 0-to 8-ounce spring scale and a reel of blank tape.

1. Place the reel of blank tape on the supply turntable. Thread the tape between the tape holdback and the tape guide and over the head assembly, but not between the capstan and capstan idler.

2. Loop the end of the tape by rolling it back over itself several times. Secure the loop with a piece of masking tape or other similar adhesive.

3. Place the hook on the spring scale through the loop; place the Top Selector control in its Monitor position.

4. Turn the Play-Record control until it locks in its clockwise position.

5. Using the spring scale, pull the tape from the supply reel and note the reading on the scale. The reading should be between 2 and 3 ounces while the tape is moving steadily.

Take-up Tension

Test equipment—an accurate 0 to 8 ounce spring an empty tape reel with a 2-inch hub diameter; a length of string (3 to 4 feet).

1. Place the empty reel on the take-up turntable.
2. Anchor the string on the reel, and wrap the string around the reel hub once or twice in a clockwise direction.
3. Tie a loop in the end of the string; place the hook on the spring scale through the loop, and place the Top Selector control in its Monitor position.
4. Turn the Play-Record control clockwise until it locks in position.
5. Let the spring scale follow slowly as the string is being wound on the reel, and take the scale reading. It should read approximately 3 ounce-inches.

NOTE: If the hub is two inches in diameter, the spring scale will indicate directly in ounce-inches. If the hub is smaller, wrap it with tape to the 2-inch diameter level. If the hub is larger, multiply the spring scale reading by the radius of the hub to determine the correct ounce-inch reading.

Brake Tension

Test equipment—an accurate 0-to 8-ounce spring scale. The following procedure applies to both the supply and to the take-up turntable brakes. The brakes are applied in the stopping position only; therefore, the controls do not have to be manipulated.

1. Remove top cover (11) from the tape transport (see "Disassembly Instructions"), and remove brake release control rods (34).
2. Place the hook on the spring scale through the hole on the brake assembly, or put a string through the hole as a loop for the scale.
3. Using the spring scale, pull the brake in a direction that will move the brake assembly directly away from the turntable. The scale should read from 5 to 8 ounces as the brake barely clears the turntable.
4. Repeat the foregoing procedure on the other turntable.
5. Replace brake release control rods (34).

Capstan Idler Pressure

Test equipment—accurate spring scale capable of measuring up to 3 pounds.

1. Remove top cover from the tape transport (see "Disassembly Instructions").
2. Turn the Play-Record control clockwise until it locks in position.
3. There are two holes in capstan idler arm (35), but only one hole is used. Place the hook of the spring scale through the empty hole.
4. Using the spring scale, pull the capstan idler in a direction that will move the idler away from the capstan. Scale reading should be from 2 pounds to 2 pounds 13 ounces as the idler barely clears the capstan.

TEST AND ADJUSTMENT PROCEDURE FOR THE AMPLIFIER

Clean All heads

1. Use Ampex Audio Part #823 head cleaner (or equivalent) and a cotton swab on a stick (Q-Tip or its equivalent).

Demagnetize All Heads

1. Use Ampex Audio Part #820 head demagnetizer (or equivalent). Avoid actually contacting the head surfaces with the demagnetizer tips unless the tips are protected by masking tape, transparent tape, etc.

Apply Power and Connect Test Cables

1. Connect AC power plug.
2. Connect output jack to an AC VTVM that will read an rms voltage of 0.002 or less.

Thread Standard Alignment Tape

1. Use standard alignment tape, #5563 (or equivalent), for 7 1/2 ips; #6000 (or equivalent) for 3 3/4 ips.

Place In Play Mode and Check Tape Tracking

Tape must be centered on all three heads. This centering should occur with between one and two laminations visible on each side of the tape on the erase and record heads. On the universal playback head, the upper edge of the tape should coincide with the joint of the mu-metal and copper lamination when the head is in the upper position; and the heads must be parallel to the capstan.

Check the operation of all tape motion controls, with the exception of the Record Button, to make certain

that the tape handles smoothly at all times.

Check Playback Response

1. Set AC VTVM to 0 (1 volt rms) scale.
2. Set Selector Switch to Stereo (Universal Playback lever should be in the down position.)
3. On the 250-cycle tone (second tone on standard tape), adjust the Volume control for —2 dbm (.62 volt rms) on an AC VTVM, and check both left and right channel outputs; levels should be within ± 2 db of each other.
4. Rewind tape to 10,000-cycle tone, align the playback head aziumuth by adjusting the right rear screw of the three head mounting screws. If this adjustment is off, the Volume control should be reset.

NOTE: From this point on, do not change the Volume Control setting.

5. Check the frequency response, which should be ± 2 db between 50 and 10,000 cycles per second. Regard each channel response separately. Be sure to allow for the difference in level (if any) between the two channels at 250 cycles.

Playback Noise

1. Stop the tape.
2. Be sure the mu-metal head cover and electronic shield are installed.
3. VTVM should read below —48 dbm, .002V at 7 1/2 ips.
4. VTVM should read below —43 dbm, .005V at 3 3/4 ips.

NOTE: It is important to listen for any noises, such as resistor, tube microphonic, etc., noises, which would be objectionable. Since this is an audio recorder, the actual sound is as important as the meter reading.

Record Level Meter Calibration

1. Set audio oscillator to 250 cycles.
2. Place recorder in Record mode, and adjust phono Record Level control for —2 dbm (.62 rms) at output jack of recorder.
3. Adjust Meter Calibrate Control R4 for record level meter reading at upper edge of black mark. With a stereo unit, the bias adjustment may be set to ± 0.25 db to equalize the recording level meter reading between the two channels. If the bias must be adjusted, recheck the over-all frequency response (Step 9 under "Record Function").

Flutter and Wow Check

Flutter and wow should be checked with a flutter meter. Use the recommended procedure of the flutter meter manufacturer. Flutter measurements should be: at 7 1/2 ips, less than 0.2% rms; at 3 3/4 ips, less than 0.25% rms.

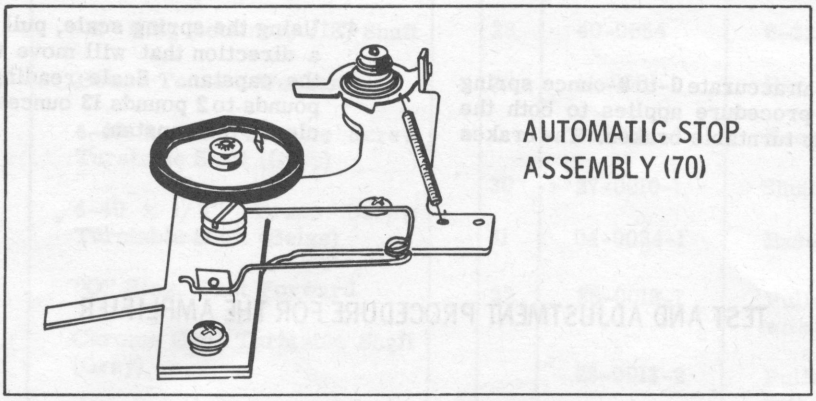

TROUBLE CHART

Symptom	Cause	Remedy
Abnormal tape speed.	1. Low line voltage.	1. Line voltage must be at least 105 volts.
	2. Capstan drive belt (33) slips.	2. Clean associated pulley surfaces; replace capstan drive belt (33) if necessary.
	3. Incorrect pressure on capstan idler assembly (4).	3. Replace capstan idler spring (36).
	4. Defective drive motor (83).	4. Replace drive motor (83).
	5. Excessive tape holdback tension.	5. Check tape tension.

TROUBLE CHART (CON'T.)

Symptom	Cause	Remedy
Capstan does not rotate when Top Selector is in On position.	1. Power cable not connected, or defective fuse.	1. Connect cable, or replace fuse.
	2. Capstan drive belt (33) jammed because speed selector was turned while capstan was not rotating.	2. Return speed selector to 3 3/4 ips position. When capstan starts moving, turn speed selector to desired speed.
	3. Capstan drive belt (33) broken.	3. Replace capstan drive belt (33).
	4. Defective motor (83).	4. Replace drive motor (83).
Defective power supply.	1. Power cable not connected.	1. Connect power cable.
	2. Defective fuse M2.	2. Replace fuse M2.
	3. Defective power transformer T1.	3. Replace power transformer T1.
	4. Defective rectifier tube.	4. Replace rectifier tube.
No recording meter indication when microphone is being used.	1. Unit not in Record.	1. Place unit in Record.
	2. Defective tube V4, V5 (Left Channel); V6, V7 (Right Channel), V8 (VU Amp), VU Meter or associated components.	2. (a) Record a section of tape at approximately the normal level. Play back the tape. If the recording sounds normal, check VU Meter Amp (V8), VU Meter and associated circuit. (b) If recording does not sound normal, check V4, V5 (Left Channel) or V6, V7 (Right Channel) and associated circuits.
Fails to record.	1. Defective tube V4, V5, V6, V7, V9 or associated components.	1. Replace defective tube or components.
	2. Defective recording head.	2. Replace recording head.
Does not play back when tape known to be properly recorded is on the unit. Tape is moving normally.	1. Upper track only is defective—indicates defective tube V1 or V2; defective components in these stages; defective head.	1. Replace any defective parts.
	2. Lower track only is defective—indicates defective tube V2 or V3 defective components; defective head.	2. Replace any defective parts.
	3. Both tracks defective—indicates defective tube.	3. Replace tube.
Does not erase.	1. Defective tube V9 , or defective components.	1. Replace defective tube or components.
	2. Contacts on Record-Play switch M6 are not making contact or are dirty.	2. Clean contacts; make sure contacts make proper contact.
	3. Defective erase head.	3. Replace erase head.

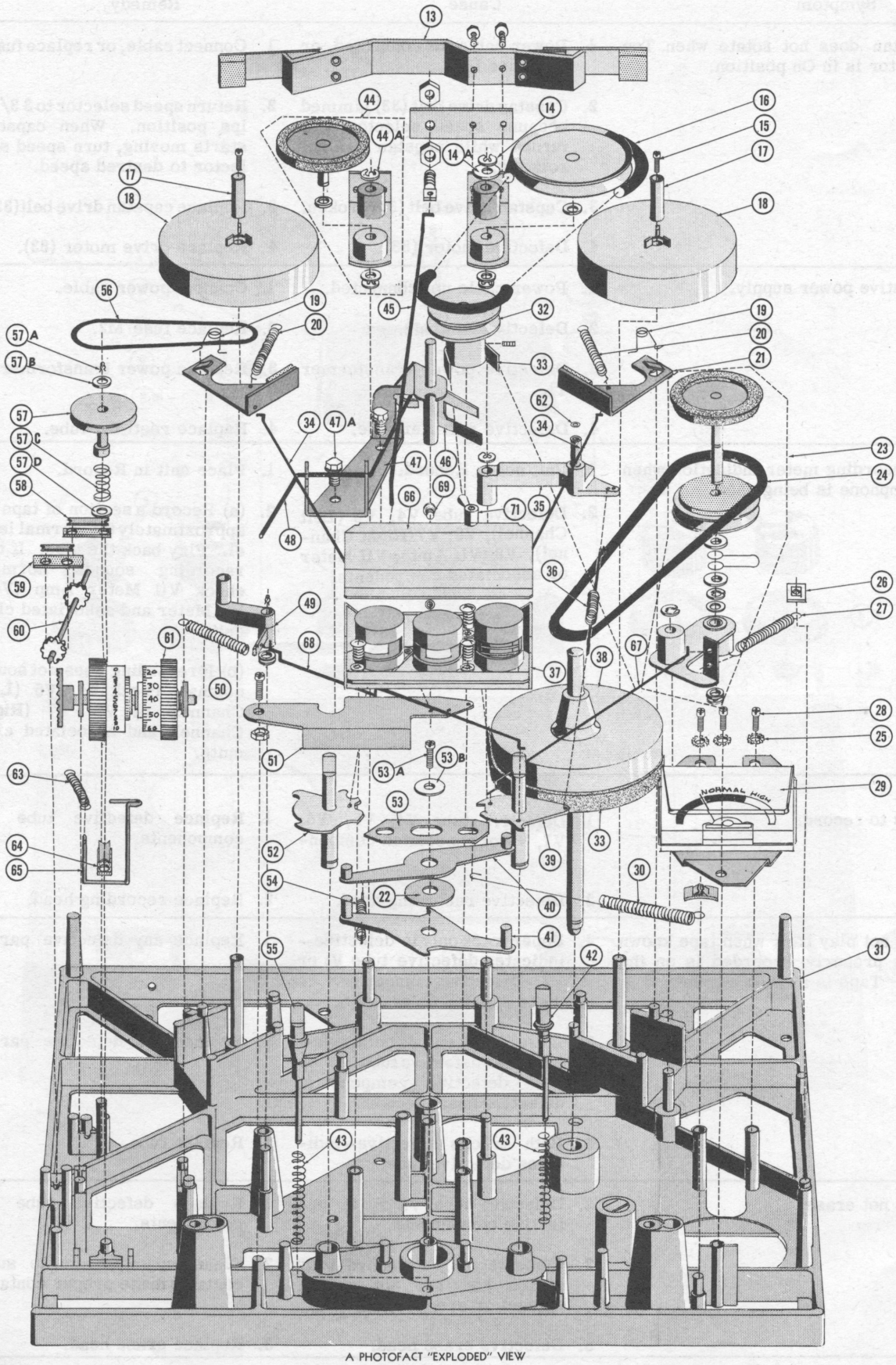

A PHOTOFACT "EXPLODED" VIEW
©Howard W. Sams & Co., Inc. 1959

FIG. 4A EXPLODED VIEW OF PARTS ABOVE BASEPLATE

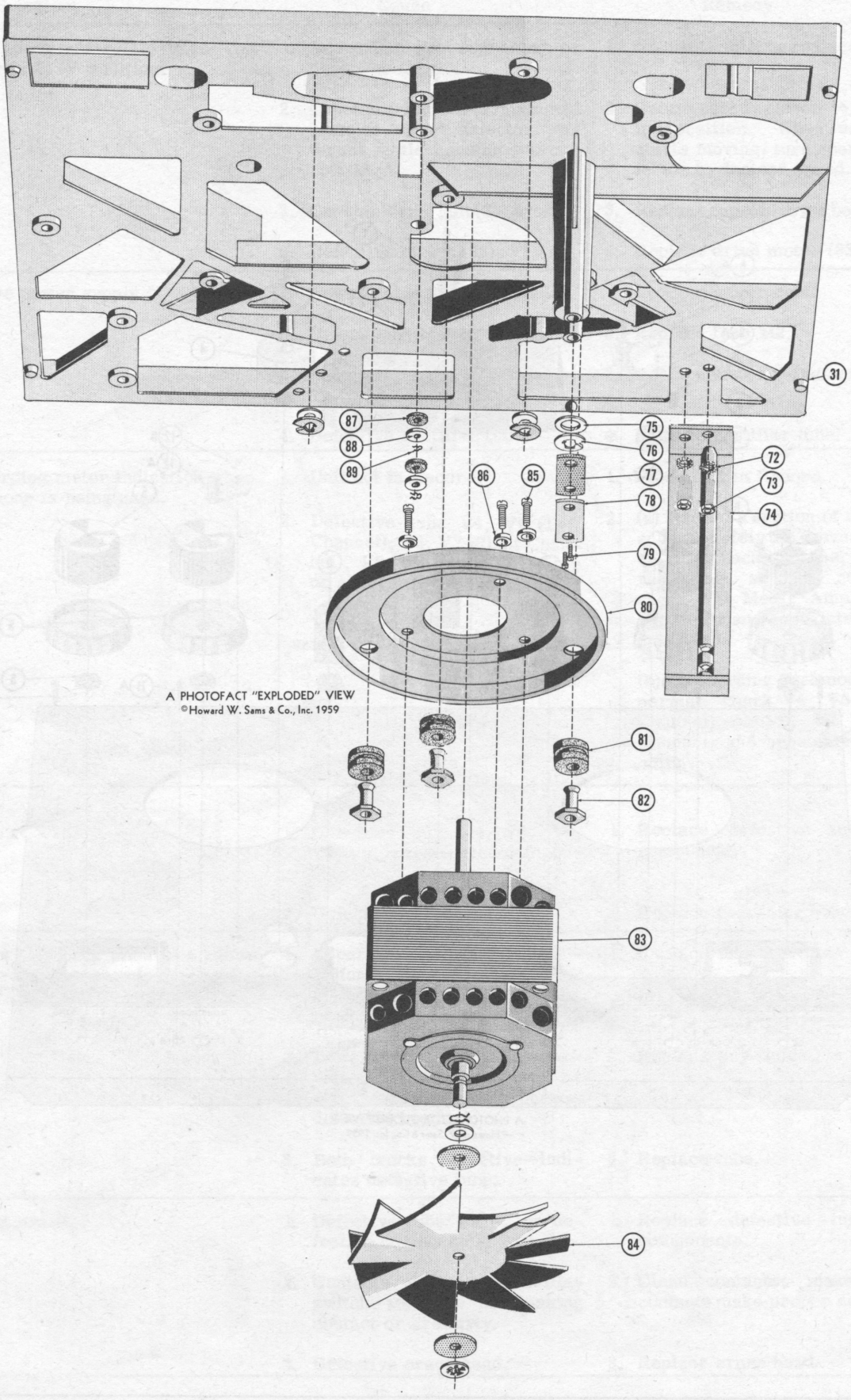

A PHOTOFACT "EXPLODED" VIEW
©Howard W. Sams & Co., Inc. 1959

FIG. 4B EXPLODED VIEW OF PARTS BELOW BASEPLATE

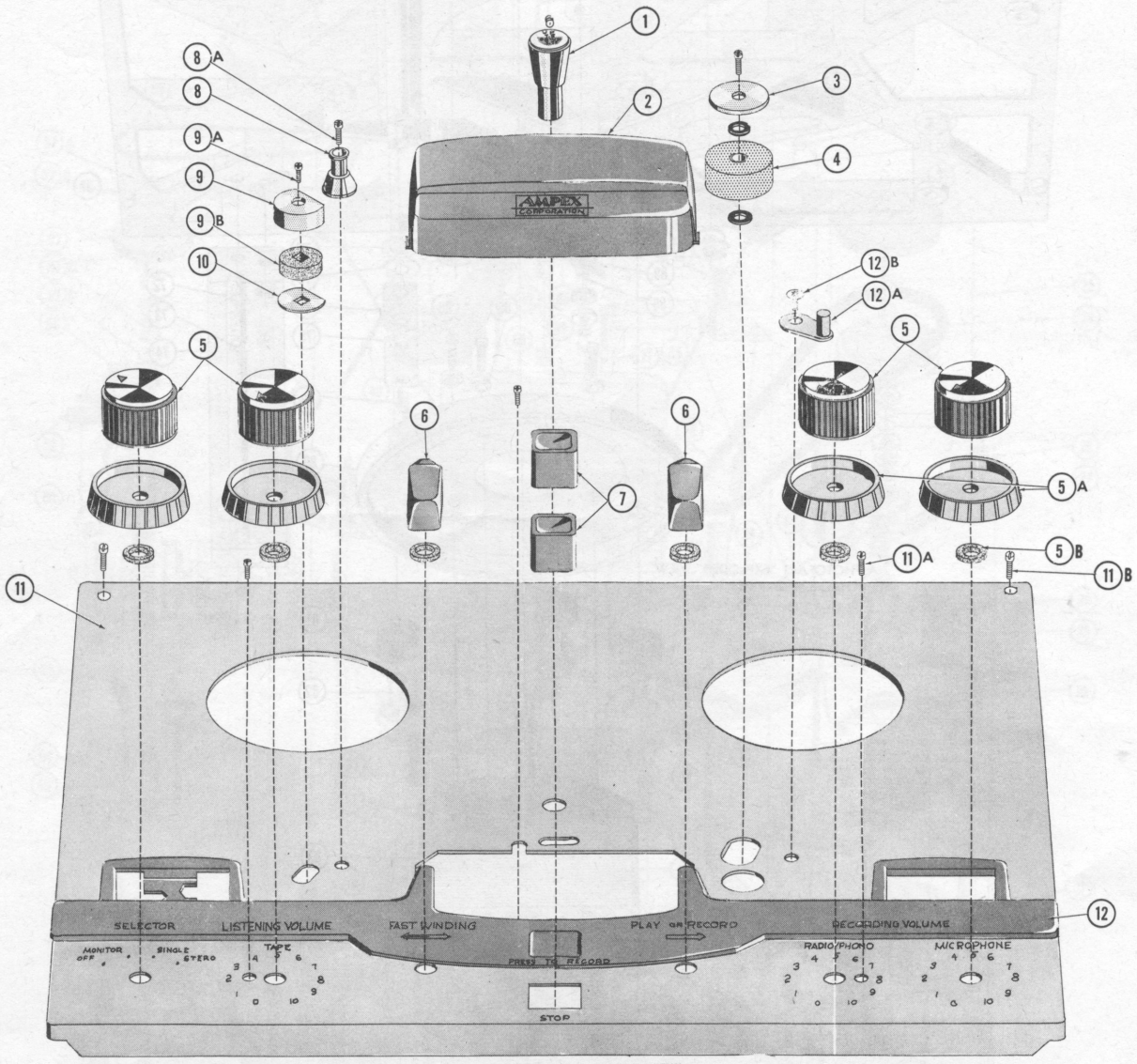

A PHOTOFACT "EXPLODED" VIEW
©Howard W. Sams & Co., Inc. 1959

FIG. 4C EXPLODED VIEW OF PARTS ABOVE COVER ASSEMBLY

TROUBLE CHART(CON'T.)

Symptom	Cause	Remedy
Insufficient braking force. Tape loops when unit is stopped in any mode.	1. Brake lining worn on brake arm assembly (21).	1. Replace worn brake lining.
	2. Brake arm assembly (21) not free to move with rotation of turntable. Brake de-energizing spring (20) not positioned properly.	2. Reposition or replace brake de-energizing spring (20).
Wrong take-up tension: tape loops when unit is starting.	1. Take-up "O" ring (24) slips or is broken.	1. Clean pulley surfaces; replace "O" ring if necessary.
	2. Rubber tire on play take-up idler assembly (23) slips or is worn.	2. Clean the tire and the take-up turntable; replace play take-up idler assembly (23) if necessary.
	3. Defective play take-up spring (27).	3. Replace play take-up spring (27).
Poor high-frequency response.	1. Heads and tape not making proper contact.	1. Clean the heads.
	2. Improper bias adjustment.	2. Adjust the bias.
	3. Improper head alignment.	3. Align the heads.
	4. Faulty reproduce amplifiers.	4. Use standard audio trouble-shooting procedures.
	5. Faulty record amplifier (would be indicated if reproduction is normal).	5. Use standard audio trouble-shooting procedures.
Flutter and wow.	1. Dirt on the components in the tape threading path.	1. Clean these components thoroughly.
	2. Flutter frequency, 21.36 cps at 7 1/2 ips. Flat or dented capstan idler (4). Capstan revolves at 142 rpm.	2. Replace capstan idler (4).
	3. Flutter frequency, 5.7 cps at 7 1/2 ips. Capstan drive belt (33) defective (moves at approximately 343 rpm).	3. Replace defective capstan drive belt (33). Make sure the drive belt is tracking properly.

MECHANICAL PARTS LIST ABOVE COVER ASSEMBLY

Ref. No.	Part Number Grey	Part Number Beige	Description
1	10-0009-1	10-0009-3	Speed Control Button
2	29-0034-3	29-0034-5	Head Cover, With Opening for Head Shift Rod, Universal Playback, Polystyrine
3	29-0032-1	29-0032-3	Capstan Idler Cover
4	04-0020-1	04-0020-1	Capstan Idler Assembly, 1-1/16" dia.

Ref. No.	Part Number Grey	Part Number Beige	Description
5	10-0005-5	10-0019	Top Selector Listening; Radio-Phono and Microphone Record Level Control
5A	10-0024	10-0021	Bottom Selector Listing; Radio-Phono and Microphone Record Level Control Knob With Arrow
5B	44-0026-1	44-0026-1	Felt Washer

MECHANICAL PARTS LIST ABOVE COVER ASSEMBLY (CON'T.)

Ref. No.	Part Number Grey	Part Number Beige	Description
6	10-0008-1	10-0008-3	Fast Winding, Play or Record Control Bar Knob With #27-0005 Spring
7	10-0007-1	10-0007-3	Stop and Record Lock Push Buttons
8	21-0004	21-0004	Tape Guide
8A	40-0056	40-0113	4-40 x 3/4" Phillips Screw
9	29-0033-1	29-0033-3	Tape Holdback Cover
9A	40-0055	40-0112	4-40 x 1/4" Phillips Screw
9B	44-0026-2	44-0026-2	Felt Tape Holdback Washer
10	33-0004-1	33-0004-1	Tape Holdback Base
11			Cover Assembly With Escutcheon Models 952, 954, 960 Stereo Record, Universal Playback With Automatic Stop Assembly
11A			6-32 x 3/8" Screw, Washer #40-0031
11B	40-0080	40-0114	6-32 x 1/4" Rear Cover Plate Screw
12	11-0017-1	11-0017-3	Escutcheon
12A	04-0057-1	04-0057-3	Automatic Stop Arm Assembly
12B			4 x 40 x 1/4" Machine Screw

MECHANICAL PARTS LIST BELOW COVER ASSEMBLY

Ref. No.	Part No.	Description
13	03-0003-1	Fast Wind Pulley Assembly, Includes Pulley, Brake Arm Assembly Fast Wind Holdback Felets
14		"E" Ring Retainer, .187 Shaft
14A	44-0032	Bowed Tension Washer
15	40-0055	4-40 x 1/4" Chrome Screw Turntable Shaft (Grey)
	40-0112	4-40 x 1/4" Brass Screw Turntable Shaft (Beige)
16	31-0001-1	"O" Ring, Fast Forward
17	21-0019-1	Chrome Cap, Turntable Shaft (Grey)
	21-0019-3	Brass Cap, Turntable Shaft (Beige)
18	04-0026-1	Turntable Assembly (Grey)
	04-0026-3	Turntable Assembly (Beige)
19	27-0014-1	Brake Spring, 2 Required
20	27-0016-1	Brake De-energizing Spring
21	04-0030-1	Take-up, Brake Arm Assembly, with #13-0014-1 Lining
22	44-0024-3	Washer
23	03-0005-1	Play Take-up Idler Assembly
24	31-0002	"O" Ring Take-up
25	44-0031	Lock Washer
26	32-0001	Push-on Retainer
27	27-0013-1	Play Take-up Spring
28	40-0054	6-32 x 1/4" Machine Screw
29	14-0001-1	Recording Level Meter (Grey)
	14-0001-4	Recording Level Meter (Beige)
30	27-0010-1	Shuttle Return Spring
31	04-0034-1	Baseplate Subassembly
32	25-0013-1	Pulley, Motor, 60 Cycle, Used with General Industries Motor
	25-0013-2	Pulley, Motor, 50 Cycle, Used with General Industries Motor
	25-0013-3	Pulley, Motor, 60 Cycle, Used with Howard Motor
	25-0013-4	Pulley, Motor, 50 Cycle, Used with Howard Motor
33	31-0004-1	Capstan Drive Belt
34	21-0022-1	Brake Release Control Rod
35	04-0025-1	Capstan Idler Arm
36	27-0025-1	Capstan Idler Spring
37	02-0062-7	Stereo Record, Stereo Erase, Universal Playback (Four-Track Playback)
38	04-0024-1	Capstan Assembly

MECHANICAL PARTS LIST BELOW COVER ASSEMBLY (CON'T.)

Ref. No.	Part No.	Description
39	04-0028-1	Play Control Cam Assembly
40	04-0032-1	Upper Cam Control Arm Assy.
41	04-0031-1	Lower Cam Control Arm Assy.
42	23-0018-1	Shaft Record Cam
43	27-0012-1	Shaft Return Spring
44	03-0004-1	Rewind Idler Assembly
44A	32-0006-1	"E" Ring Retainer, .187 Shaft
45	21-0023-1	Fast Wind Control Rod
46	04-0033-1	Yoke Subassembly, Dual Speed, For Both 60 or 50 Cycle
47	26-0012-1	Detent Bracket
47A	40-0067	Self-Tapping Screw #8-1/4"
48	23-0021-1	Dual Speed Detent and Equalization Wire
49	23-0019-1	Holdback Arm
50	27-0011-1	Holdback Tension Spring
51	23-0020-1	Brake Lever
52	04-0028-1	Play Control, Cam Assembly
53	23-0016-1	Interlock Shuttle
53A	40-0054	6-32 x 1/4 Phillips Machine Screw
53B	44-0029-3	Washer
54		
55	23-0017-1	Shaft Stop Cam
56	31-0003	"O" Ring Position Indicator
57	04-0023	Worm Pulley Assembly
57A	32-0007	Hairpin Retainer Steel
57B	44-0027-3	Cambric Washer
57C	24-0003	Worm Counter Drive Spring
57D	44-0027-3	Cambric Washer
58	27-0004-1	Retainer Spring
59	13-0016-1	Retainer Pad
60	03-0001-1	Counterdrive Jack Shaft Assy.
61	02-0042-2	Position Indicator Assy. (Grey)
	02-0042-4	Position Indicator Assy. (Beige)
62	44-0027-3	Cambric Washer

Ref. No.	Part No.	Description
63	27-0003-1	Position Indicator Latch Spring
64	27-0004-1	Retainer Spring
65	23-0002-1	Latch Escapement
66	04-0021-2	Mu-Metal Head Cover
67	21-0020-1	Play Take-up Control Rod
68	21-0021-1	Holdback Tension Control Rod
69	40-0054	6-32 x 1/4" Screw
70	02-0059-1	Automatic Stop Assembly (Available As a Complete Assembly Only). Does Not Include Shutoff Lever Arm or Screw. See Ref. No. 12A and 12B
71	21-0033-1	Head Shift Rod, Operates Head Shift Post and Plate Assembly #04-0058
72		Washer; Included With Ref. No. 73
73	42-0004	Kep Nut With Washer
74	26-0013-1	Transport Mounting Bracket
75	44-0027-2	Cambric Washer
76	32-0008	"E" Ring Retainer
77	33-0007-1	Capstan Thrust Retainer, Nylon
78	33-0007-2	Capstan Thrust Retainer, Steel
79	40-0065-1	6-32 x 3/8" Screw, Washer No. 40-0031 Needed
80	33-0005-1	Motor Assembly Mounting Plate
81	13-0017	Motor Shock Mounts
82	42-0016-1	Sleeve Nut
83	59-0001-1	Drive Motor, General Industries
	59-0001-3	Drive Motor, Howard Industries
84	25-0003	Motor Fan
85	40-0063	8-32 x 5/16" Phillips Screw
86	44-0031	Washer
87	44-0030	Rubber Washer
88	44-0029-2	Steel Washer
89	32-0007	Hairpin Retainer

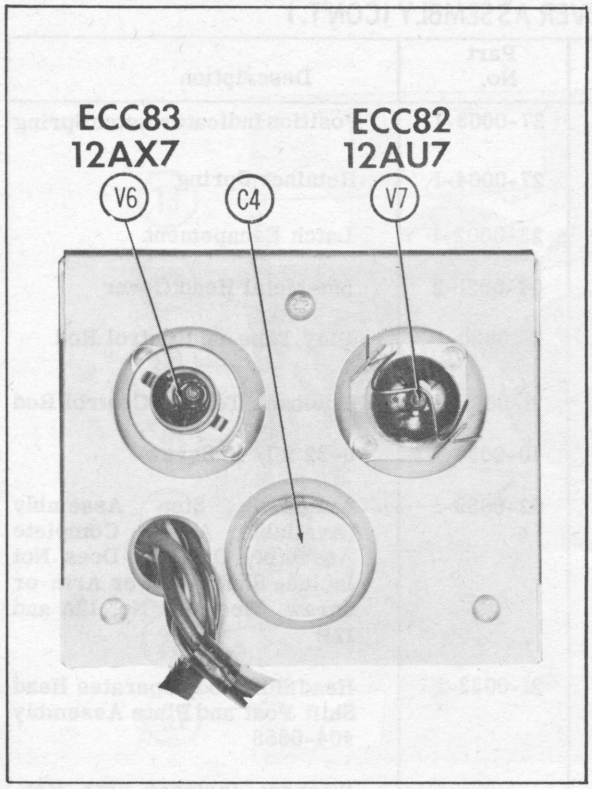

PREAMP CHASSIS - TOP VIEW

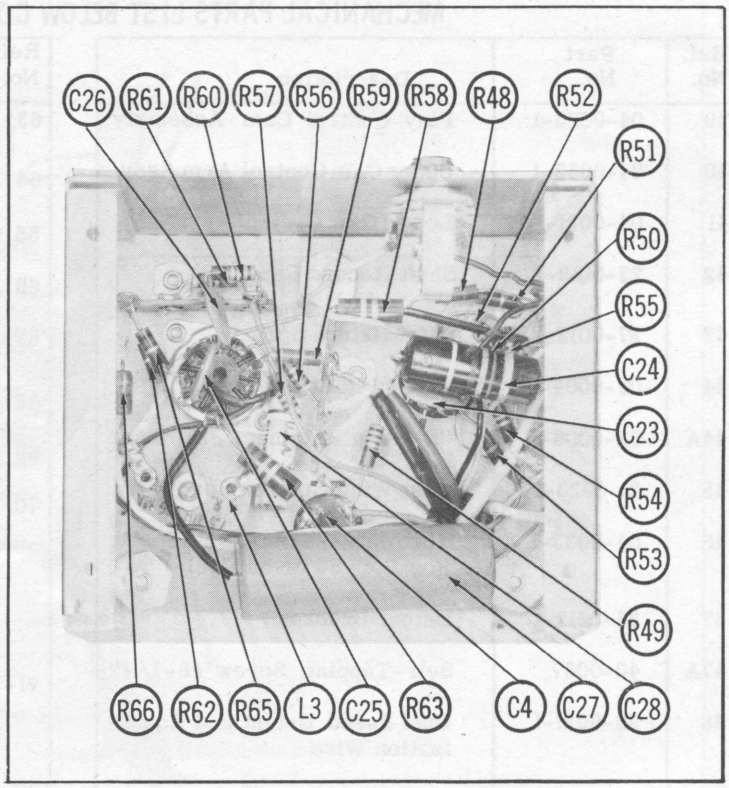

PREAMP CHASSIS - BOTTOM VIEW

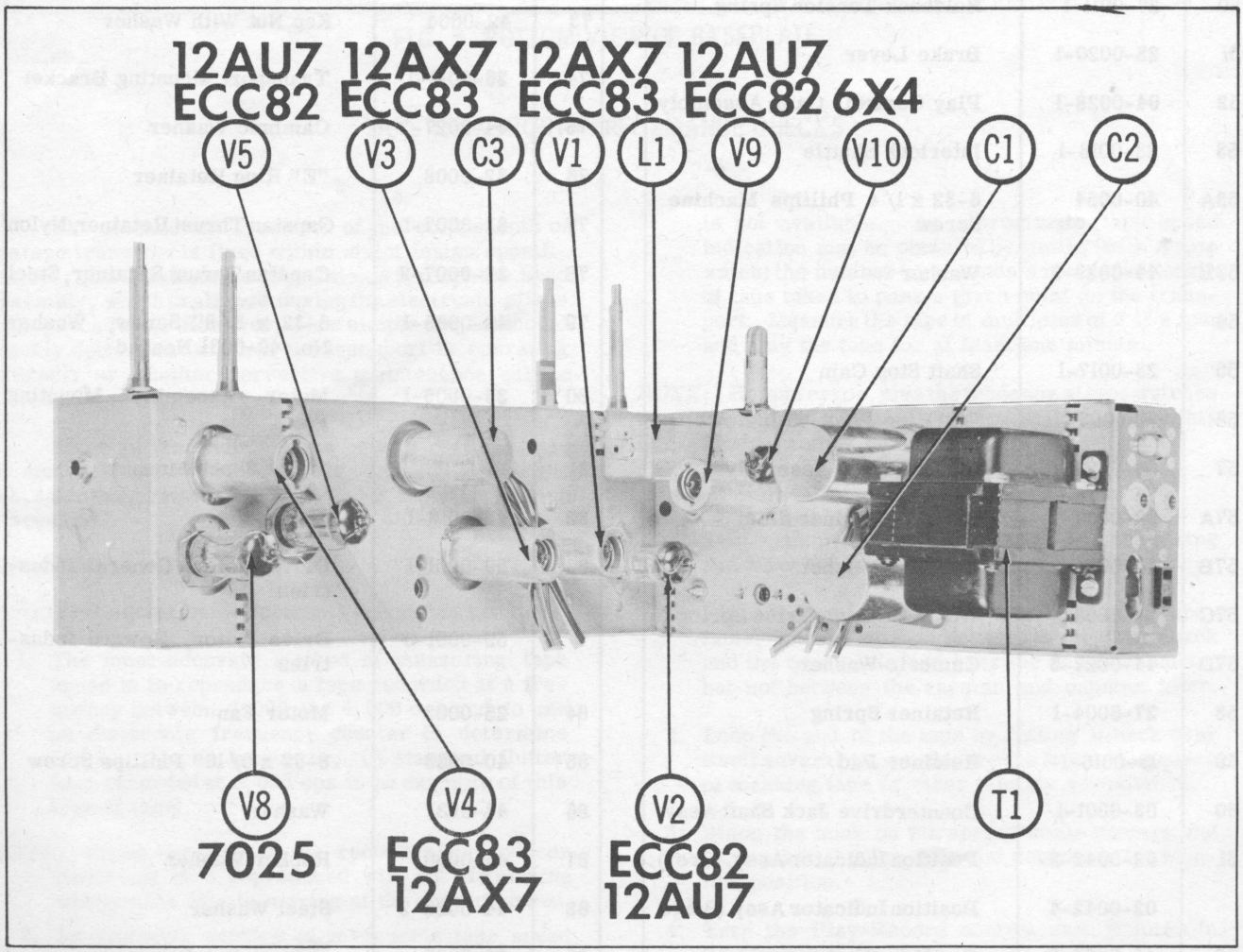

ELECTRICAL CHASSIS - TOP VIEW

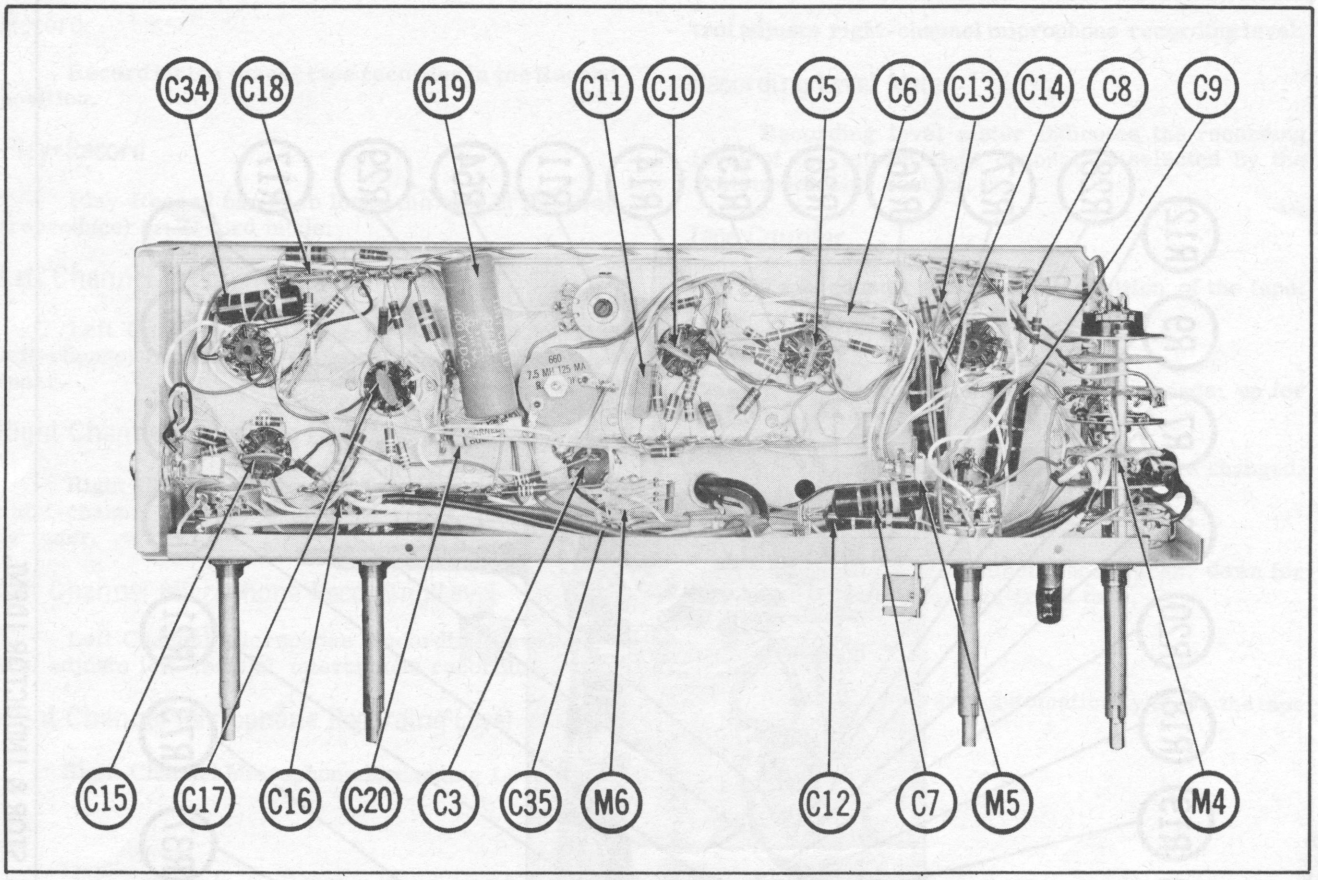

AMP CHASSIS BOTTOM VIEW - CAPACITOR & MISC IDENT.

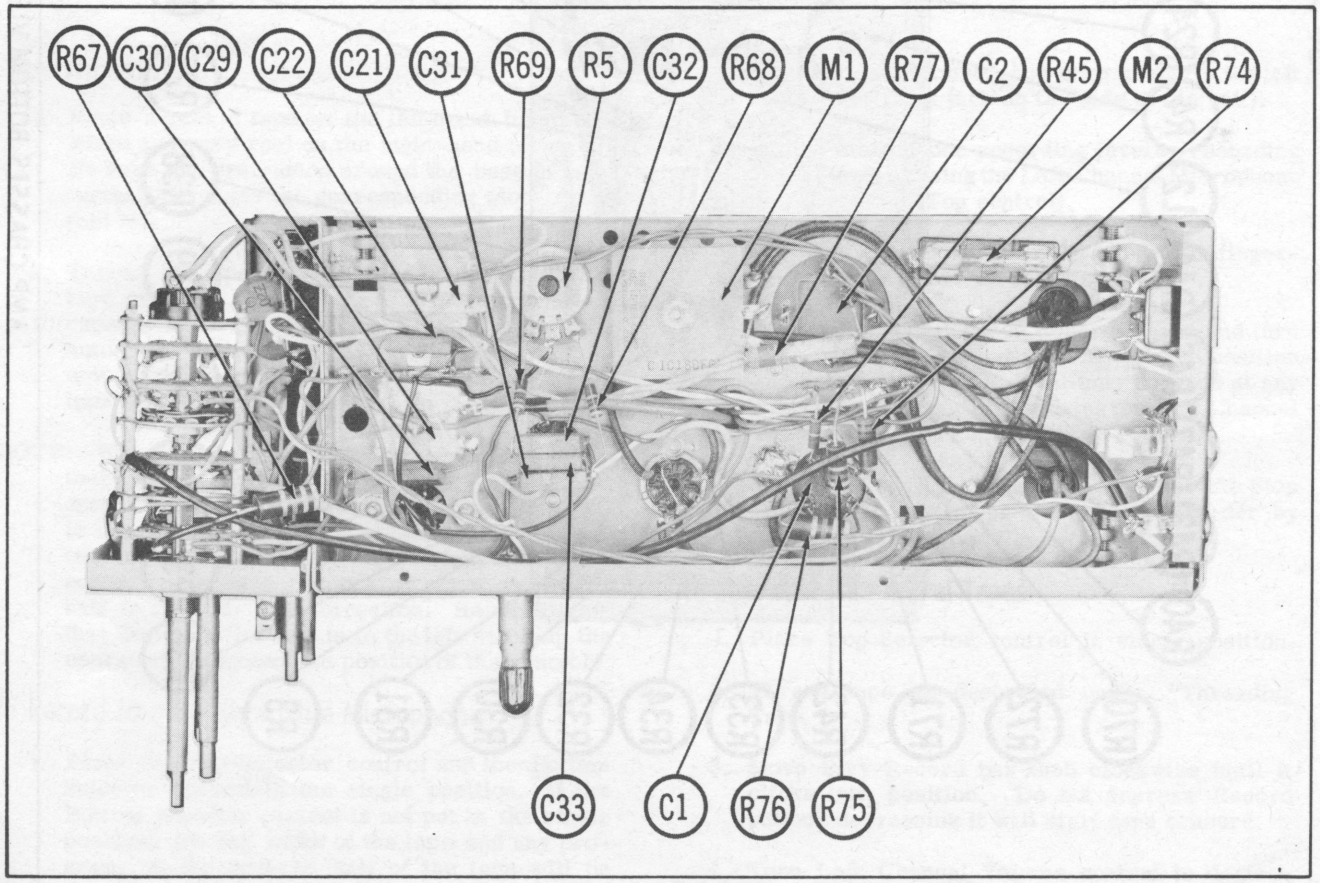

POWER CHASSIS - BOTTOM VIEW

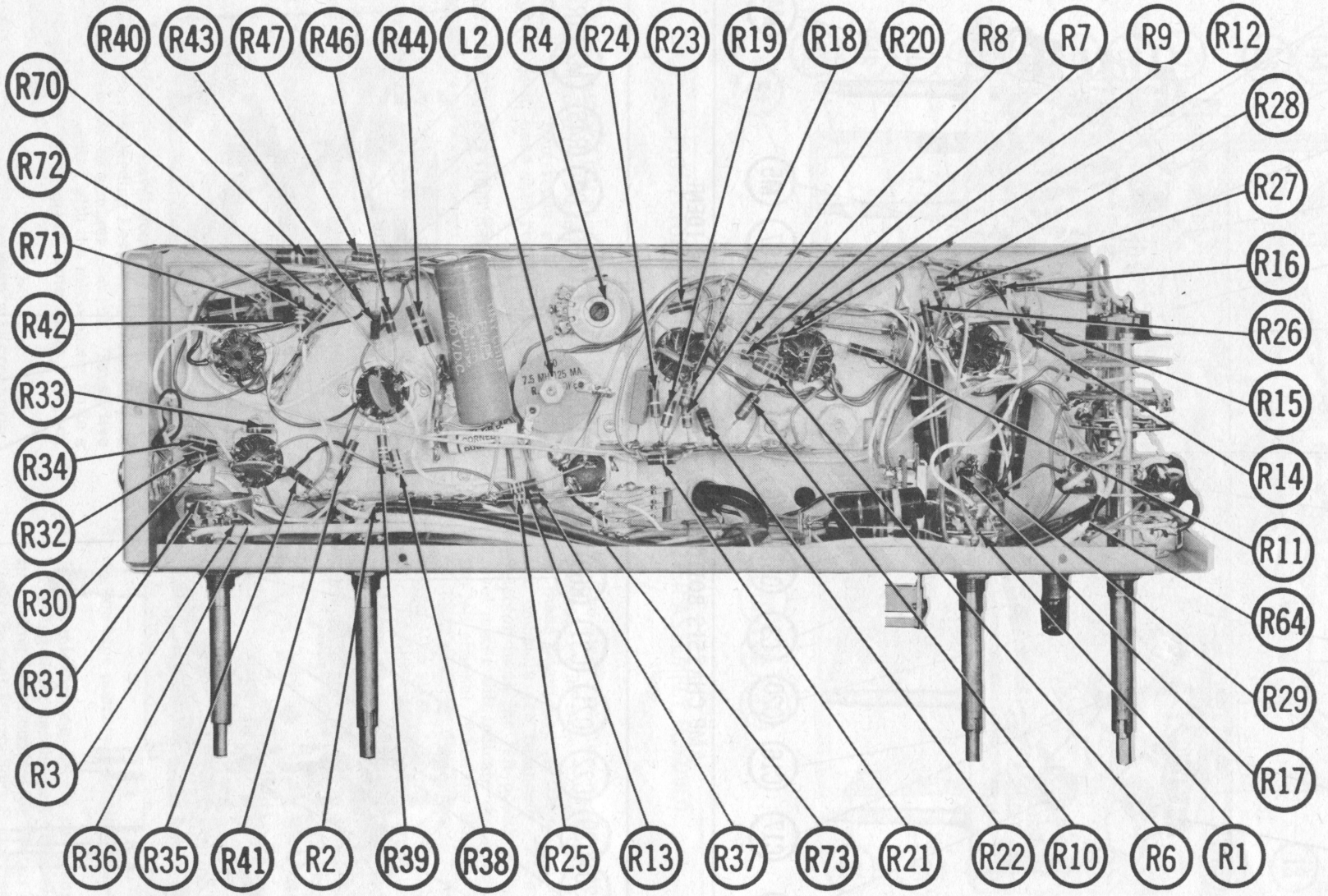

AMP CHASSIS BOTTOM VIEW - RESISTOR & INDUCTOR IDENT.

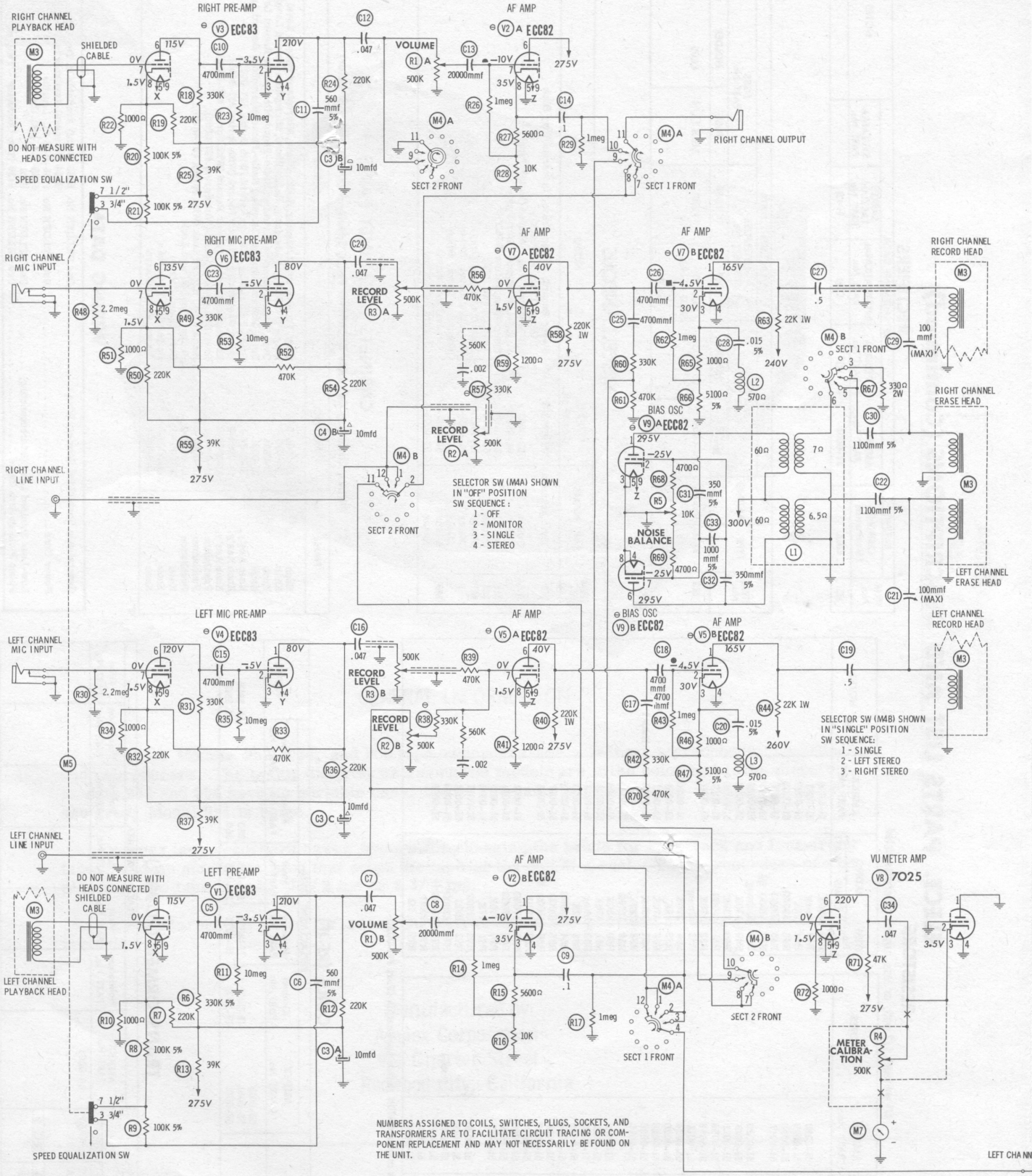

A PHOTOFACT STANDARD NOTATION SCHEMATIC

©Howard W. Sams & Co., Inc. 1959

RESISTANCE READINGS

ITEM	TUBE	Pin 1	Pin 2	Pin 3	Pin 4	Pin 5	Pin 6	Pin 7	Pin 8	Pin 9
V1	ECC83 12AX7	†265K	10meg	0Ω	4.5Ω	4.5Ω	†375K	INF	1000Ω	0Ω
V2	ECC82 12AU7	†5800Ω	1meg	15K	0Ω	0Ω	†5800Ω	1meg	15K	.1Ω
V3	ECC83 12AX7	†265K	10meg	0Ω	4.5Ω	4.5Ω	†375K	INF	1000Ω	6.5Ω
V4	ECC83 12AX7	†265K	10meg	0Ω	4.5Ω	4.5Ω	†375K	0Ω	1000Ω	6.5Ω
V5	ECC82 12AU7	†30K	1meg	6100Ω	0Ω	0Ω	†225K	200K	1200Ω	.1Ω
V6	ECC83 12AX7	†265K	10Meg	0Ω	4.5Ω	4.5Ω	†375K	0Ω	1000Ω	6.5Ω
V7	ECC82 12AU7	†30K	1meg	6100Ω	0Ω	0Ω	†225K	200K	1200Ω	.1Ω
V8	7025	0Ω	0Ω	180K	0Ω	0Ω	†53K	470K	1000Ω	.1Ω
V9	ECC82 12AU7	†400Ω	10K	0Ω	0Ω	0Ω	†400Ω	10K	0Ω	.1Ω
V10	6X4	360Ω	NC	¶	¶	NC	380Ω	¶		

ALL MEASUREMENTS TAKEN IN "PLAY" POSITION UNLESS OTHERWISE DESIGNATED.
† MEASURED FROM PIN 7 OF V10.
▲ MEASURED FROM PIN 3 OF V2.
▬ MEASURED FROM PIN 8 OF V2.
● MEASURED FROM PIN 3 OF V5.
■ MEASURED FROM PIN 3 OF V7.

1. DC voltage measurements taken with vacuum tube voltmeter; AC voltages measured at 1000 ohms per volt.
2. Socket connections are shown as bottom views.
3. Measured values are from socket pin to common negative.
4. Line voltage maintained at 117 volts for voltage readings.
5. Nominal tolerance of component values makes possible a variation of ± 15% in voltage and resistance readings.
6. All controls at minimum, proper output load connected.

Θ SEE PARTS LIST FOR ALTERNATE VALUE OR APPLICATION

DC COIL RESISTANCE VALUES UNDER ONE OHM NOT SHOWN ON SCHEMATIC DIAGRAM

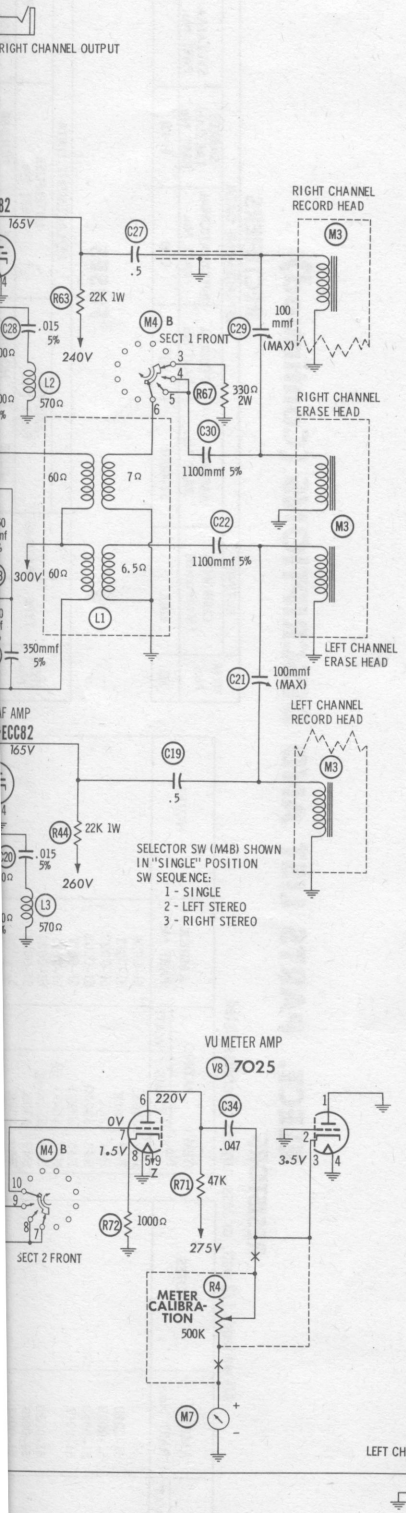

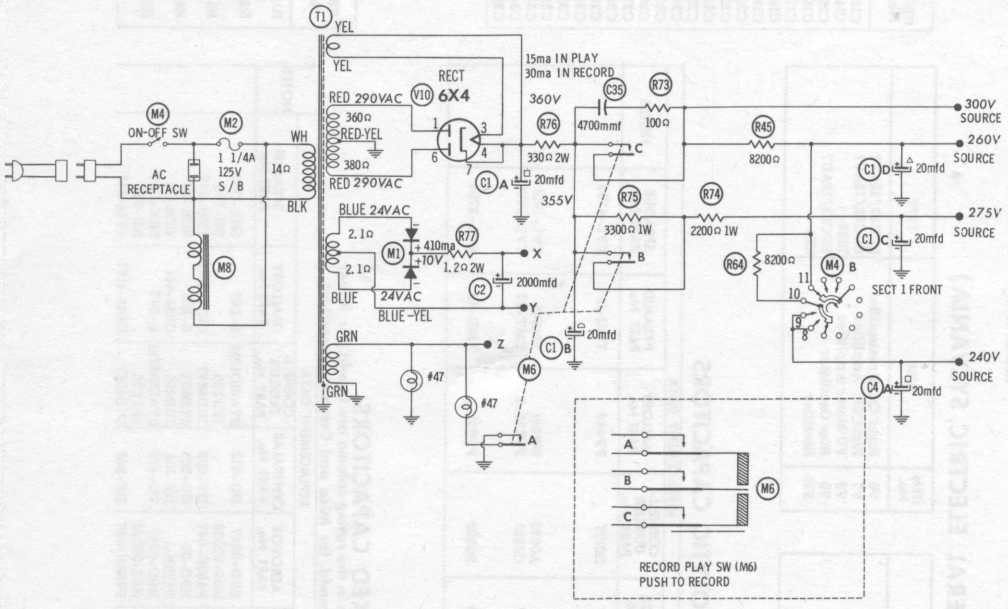

AMPEX MODELS
952, 954, 960

RESISTANCE READINGS

ITEM	TUBE	Pin 1	Pin 2	Pin 3	Pin 4	Pin 5	Pin 6	Pin 7	Pin 8	Pin 9
V1	ECC83 12AX7	†265K	10meg	0Ω	4.5Ω	4.5Ω	†375K	INF	1000Ω	0Ω
V2	ECC82 12AU7	†5800Ω	1meg	15K	0Ω	0Ω	†5800Ω	1meg	15K	.1Ω
V3	ECC83 12AX7	†265K	10meg	0Ω	4.5Ω	4.5Ω	†375K	INF	1000Ω	6.5Ω
V4	ECC83 12AX7	†265K	10meg	0Ω	4.5Ω	4.5Ω	†375K	0Ω	1000Ω	6.5Ω
V5	ECC82 12AU7	†30K	1meg	6100Ω	0Ω	0Ω	†225K	200K	1200Ω	.1Ω
V6	ECC83 12AX7	†265K	10Meg	0Ω	4.5Ω	4.5Ω	†375K	0Ω	1000Ω	6.5Ω
V7	ECC82 12AU7	†30K	1meg	6100Ω	0Ω	0Ω	†225K	200K	1200Ω	.1Ω
V8	7025	0Ω	0Ω	180K	0Ω	0Ω	†53K	470K	1000Ω	.1Ω
V9	ECC82 12AU7	†400Ω	10K	0Ω	0Ω	0Ω	†400Ω	10K	0Ω	.1Ω
V10	6X4	360Ω	NC	¶	¶	NC	380Ω	¶		

ALL MEASUREMENTS TAKEN IN "PLAY" POSITION UNLESS OTHERWISE DESIGNATED.
† MEASURED FROM PIN 7 OF V10.
▲ MEASURED FROM PIN 3 OF V2.
▲ MEASURED FROM PIN 8 OF V2.
● MEASURED FROM PIN 3 OF V5.
■ MEASURED FROM PIN 3 OF V7.

1. DC voltage measurements taken with vacuum tube voltmeter; AC voltages measured at 1000 ohms per volt.
2. Socket connections are shown as bottom views.
3. Measured values are from socket pin to common negative.
4. Line voltage maintained at 117 volts for voltage readings.
5. Nominal tolerance of component values makes possible a variation of ±15% in voltage and resistance readings.
6. All controls at minimum, proper output load connected.

⊖ SEE PARTS LIST FOR ALTERNATE VALUE OR APPLICATION

DC COIL RESISTANCE VALUES UNDER ONE OHM NOT SHOWN ON SCHEMATIC DIAGRAM

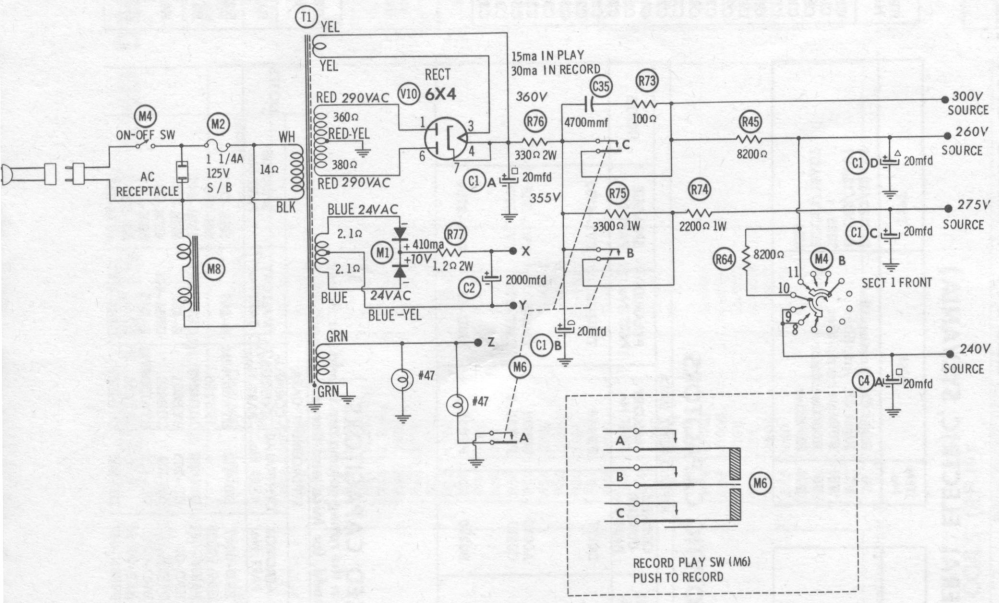

EL OUTPUT

AMPEX MODELS
952, 954, 960

Pushbutton	10-0007-2	Brown; Stop, Record Lock
Knob	10-0009-1	Grey, Speed Control
Knob	10-0009-3	Beige, Speed Control
Knob	10-0009-2	Brown, Speed Control

WIRING DATA

General-use Unshielded Hook-up Wire ..... Use BELDEN No. 8530 (Solid) Available in Ten Colors
8524 (Stranded) Available in Ten Colors
Power Cord ..... Use BELDEN No. 1765-B (6 Ft. Length)
1725-K (7½ Ft. Length)
Low-Loss Shielded Lead (Interconnecting) ..... Use BELDEN No. 8401
Phono Pick-up Arm Cable ..... Use BELDEN No. 8430 (Two Conductor - Twisted)

TRANSFORMER (POWER)

ITEM No.	RATING			REPLACEMENT DATA						
	PRI.	SEC. 1	SEC. 2	AMPEX PART No.	Halldorson PART No.	Merit PART No.	Ram PART No.	Stancor PART No.	Thordarson PART No.	Triad PART No.
T1	117V@ .43A	580 VCT @.030A	6.3V@ .6A	58-0003						
	SEC. 3	SEC. 4	SEC. 5							
	24 VCT @.5A	6.3V@ 1.7A								

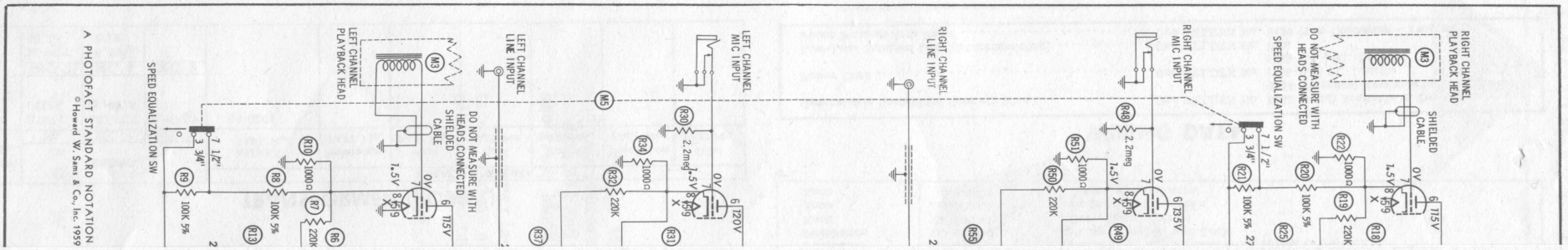

ELECT. PARTS LIST AND DESCRIPTIONS

TUBES (GENERAL ELECTRIC, SYLVANIA)

ITEM No.	USE	TYPE
V1	Left Ch. Preamplifier	ECC83/12AX7
V2	Left Ch. Cath. Follower-Right Ch. Cath. Follower	ECC82/12AU7
V3	Right Ch. Preamplifier	ECC83/12AX7
V4	Left Ch. Preamplifier	ECC83/12AX7
V5	Left Ch. AF Amplifier	ECC82/12AU7
V6	Right Ch. Preamplifier	ECC83/12AX7
V7	Right Ch. Amplifier	ECC82/12AU7
V8	VU Meter Amplifier	7025
V9	Bias Oscillator	ECC82/12AU7
V10	Rectifier	6X4

ELECTROLYTIC CAPACITORS

ITEM No.	RATING CAP.	RATING VOLT.	REPLACEMENT DATA AMPEX PART No.	AEROVOX PART No.	CORNELL-DUBILIER PART No.	MALLORY PART No.	PYRAMID PART No.	SPRAGUE PART No.	NOTES
C1A	■20	450	55-0003	AFH4-14	D0177	FP444	TMQ-12	TVL-4763	
B	▲20	450							
C	20	450							
D	▲20	450							
C2	2000	15	55-0002	AFH1-03	A0070	WP041	TMS-5	TVL-1168	
C3A	10	350	55-0001	AFH3-27	C0210	FP330.5	TMT-27	TVL-3776	
B	▲10	350							
C	▲10	350							
C4A	■20	450		AFH2-50	B0390	FP231.3	TMD-49	TVL-2754	
B	▲10	450							

FIXED CAPACITORS

Capacity values given in the rating column are in mfd. for Paper Capacitors, and in mmfd. for Mica and Ceramic Capacitors.

ITEM No.	RATING CAP.	RATING VOLT	RATING TOL	REPLACEMENT DATA AMPEX PART No.	AEROVOX PART No.	CENTRALAB PART No.	CORNELL-DUBILIER PART No.	MALLORY PART No.	SPRAGUE PART No.	NOTES
C5	4700			54-0006	BPD-0047	DD-472	BYA10D47M	B-247	5HK-D47	
C6	560		5%	54-0002	1469-00056		1R5T56		MS-356	
C7	.047	400		54-0003	P488N-047	DF-503	CUB4S47	GEM-4147	4TM-S47	
C8	20000			54-0011	BPD-02	DD-203	BYB6S2	B-120	5HK-S2	
C9	.1	400		54-0010	P488N-1	DF-104	CUB4P1	GEM-401	4TM-P1	
C10	4700			54-0006	BPD-0047	DD-472	BYA10D47M	B-247	5HK-D47	
C11	560		5%	54-0002	1469-00056		1R5T56		MS-356	
C12	.047	400		54-0003	P488N-047	DF-503	CUB4S47	GEM-4147	4TM-S47	

CAPACITORS (cont)

ITEM No.	RATING CAP.	RATING VOLT	RATING TOL	REPLACEMENT DATA AMPEX PART No.	AEROVOX PART No.	CENTRALAB PART No.	CORNELL-DUBILIER PART No.	MALLORY PART No.	SPRAGUE PART No.	NOTES
C13	20000			54-0011	BPD-02	DD-203	BYB6S2	B-120	5HK-S1	
C14	.1	400		54-0010	P488N-1	DF-104	CUB4P1	GEM-401	4TM-P1	
C15	4700			54-0006	BPD-0047	DD-472	BYA10D47M	B-247	5HK-D47	
C16	.047	400		54-0003	P488N-047	DF-503	CUB4S47	GEM-4147	4TM-S47	
C17	4700			54-0006	BPD-0047	DD-472	BYA10D47M	B-247	5HK-D47	
C18	4700			54-0006	BPD-0047	DD-472	BYA10D47M	B-247	5HK-D47	
C19	.5	400		54-0001	P488N-5		CUB4P5	GEM-405	4TM-P5	
C20	.015	200	5%	54-0005	V84C2S15 5%				2WF-S15	
C21	100			54-0008						
C22	1100		5%	54-0031	1464-0011		1R5D11		MS-211	
C23	4700			54-0006	BPD-0047	DD-472	BYA10D47M	B-247	5HK-D47	
C24	.047	400		54-0003	P488N-047	DF-503	CUB4S47	GEM-4147	4TM-S47	
C25	4700			54-0006	BPD-0047	DD-472	BYA10D47M	B-247	5HK-D47	
C26	4700			54-0006	BPD-0047	DD-472	BYA10D47M	B-247	5HK-D47	
C27	.5	400		54-0001	P488N-5		CUB4P5	GEM-405	4TM-P5	
C28	.015	200	5%	54-0005	V84C2S15 5%				2WF-S15	
C29	100			54-0008					MS-31	
C30	1100		5%	54-0031	1464-0011		1R5D11		MS-211	
C31	350		5%	54-0009	1469-00035				MS-335	
C32	350		5%	54-0009	1469-00035				MS-335	
C33	1000		5%	54-0007	1469-001		1R5D1	MCE255	MS-210	
C34	.047	400		54-0003	P488N-047	DF-503	CUB4S47	GEM-4147	4TM-S47	
C35	4700			54-0006	BPD-0047	DD-472	BYA10D47M	B-247	5HK-D47	

CONTROLS

ITEM No.	RATING RESISTANCE	RATING WATTS	REPLACEMENT DATA AMPEX PART No.	CENTRALAB PART No.	CLAROSTAT PART No.	IRC PART No.	MALLORY PART No.	INSTALLATION NOTES
R1A	500K		52-0016-2				UE1732	Volume
B	500K							Volume
R2A	500K		52-0016-2				UE1732	Recording Level
B	500K							Recording Level
R3A	500K		52-0016-2				UE1732	Recording Level
B	500K							Recording Level
R4A	500K		52-0005		B47-500K-Z	B13-133	TA55A	Meter Calibration
B	Shaft				Not Req.	TM-1	Not Req.	
R5A	10K		52-0002		B47-10K-S	B11-116	SU-20	Noise Balance
B	Shaft				Not Req.	TM-1	Not Req.	

ELECT. PARTS LIST AND DESCRIPTIONS (Continued)

RESISTORS

All wattages 1/2 watt, or less, unless otherwise listed.

ITEM No.	RATING OHMS	RATING WATT	AMPEX PART No.	NOTES
R6	330K 5%			
R7	220K		51-0020	
R8	100K 5%		51-0028	
R9	100K 5%		51-0028	
R10	1000Ω		51-0017	
R11	10meg			
R12	220K		51-0020	
R13	39K		51-0019	
R14	1meg		51-0012	
R15	5600Ω		51-0059	
R16	10K		51-0058	
R17	1meg		51-0012	
R18	330K		51-0024	
R19	220K		51-0020	
R20	100K 5%		51-0028	
R21	100K 5%		51-0028	
R22	1000Ω		51-0017	
R23	10meg			
R24	220K		51-0020	
R25	39K		51-0019	
R26	1meg		51-0012	
R27	5600Ω		51-0059	
R28	10K		51-0058	
R29	1meg		51-0012	
R30	2.2meg		51-0027	
R31	330K		51-0024	
R32	220K		51-0020	
R33	470K		51-0021	
R34	1000Ω		51-0017	
R35	10meg			
R36	220K		51-0020	
R37	39K		51-0019	
R38	330K		51-0024	Note 1
R39	470K		51-0021	
R40	220K	1	51-0020	
R41	1200Ω		51-0060	
R42	330K		51-0024	
R43	1meg		51-0012	
R44	22K	1	51-0022	
R45	8200Ω		51-0002	
R46	1000Ω		51-0017	
R47	5100Ω 5%		51-0015	
R48	2.2meg		51-0027	
R49	330K		51-0024	
R50	220K		51-0020	
R51	1000Ω		51-0017	
R52	470K		51-0021	
R53	10meg			
R54	220K		51-0020	
R55	39K		51-0019	
R56	470K		51-0021	
R57	330K		51-0024	Note 1
R58	220K	1	51-0067	
R59	1200Ω		51-0060	
R60	330K		51-0024	
R61	470K		51-0021	
R62	1meg		51-0012	
R63	22K	1	51-0022	
R64	8200Ω		51-0002	
R65	1000Ω		51-0017	
R66	5100Ω 5%		51-0015	
R67	330Ω	2		
R68	4700Ω		51-0001	
R69	4700Ω		51-0001	
R70	470K		51-0021	
R71	47K		51-0013	
R72	1000Ω		51-0017	
R73	100Ω		51-0014	
R74	2200Ω	1	51-0004	
R75	3300Ω	1	51-0005	
R76	330Ω	2		
R77	1.2Ω	2		

Note 1. Some versions may use 470K in this application (Part #51-0021).

COILS (RF-IF)

ITEM No.	USE	REPLACEMENT DATA AMPEX PART No.	Gramer PART No.	Meissner PART No.	Merit PART No.	Miller PART No.	Ram PART No.	NOTES
L1	Bias Osc.	58-0016						
L2	Tone Choke	58-0001	19-2078	19-2078	BC-505	660		7.5MH
L3	Tone Choke	58-0001	19-2078	19-2078	BC-505	660		7.5MH

TRANSFORMER (POWER)

ITEM No.	RATING PRI.	RATING SEC. 1	RATING SEC. 2	REPLACEMENT DATA AMPEX PART No.	Halldorson PART No.	Merit PART No.	Ram PART No.	Stancor PART No.	Thordarson PART No.	Triad PART No.
T1	117V@ .43A	580 VCT @ .030A	6.3V@ .6A	58-0003						
	SEC. 3	SEC. 4	SEC. 5							
	24 VCT @ .5A	6.3V@ 1.7A								

RECTIFIERS

ITEM No.	RATING CURRENT (Measured)	REPLACEMENT DATA AMPEX PART No.	FEDERAL PART No.	INTERNATIONAL PART No.	SARKES TARZIAN PART No.	SYLVANIA PART No.	NOTES
M1	.410A	57-0001	1017	C1B	604B		

FUSES

ITEM No.	TYPE	RATING	REPLACEMENT DATA AMPEX PART No. FUSE	AMPEX PART No. HOLDER	LITTELFUSE PART No. FUSE	LITTELFUSE PART No. HOLDER	BUSS PART No. FUSE	BUSS PART No. HOLDER
M2	3AG	1 1/4A 125V S/B	61-0001	63-0003	3131.25 (3AG 1 1/4A 125V) S/B	357001	MDH 1 1/4	4A05

MISCELLANEOUS

ITEM No.	PART NAME	AMPEX PART No.	NOTES
M3	Head Assembly	02-0062-7	Stereo Record, Stereo Erase, Universal Play Back (Four-Track Playback)
M4A	Switch	62-0002	Off-Monaural-Single-Stereo (Wafer Type)
B	Switch	62-0003	Single-Left-Right (Wafer Type)
M5	Switch	62-0004	Speed Equalization (DPST)
M6	Switch	62-0001	Leaf Type (3 PST)
M7	Meter	14-0001-1	Recording Level, Grey
	Meter	14-0001-2	Recording Level, Brown
	Meter	14-0001-4	Recording Level, Beige
M8	Motor	59-0001-1	(General Industries)
	Motor	59-0001-3	(Howard Industries)

CABINETS & CABINET PARTS

(When Ordering Cabinets & Cabinet Parts, Specify Model, Chassis & Color)

NAME	PART NO.	DESCRIPTION
Knob	10-0005-5	Grey, Top Selector Listening, Radio-Phono, Microphone Record Level Input
Knob	10-0019	Beige, Top Selector Listening, Radio-Phono, Microphone Record Level Input
Knob	10-0024	Grey, Bottom Selector Listening, Radio-Phono, Microphone Record Level Input
Knob	10-0021	Beige, Bottom Selector Listening, Radio-Phono, Microphone Record Level Input
Knob Ass'y.	10-0008-1	Grey; Fastwinding, Play or Record (With Spring #27-0005).
Knob Ass'y.	10-0008-3	Beige; Fastwinding, Play or Record (With Spring #27-0005).
Knob Ass'y.	10-0008-2	Brown; Fastwinding, Play or Record (With Spring #27-0005).
Pushbutton	10-0007-1	Grey; Stop, Record Lock (With Spring #27-0005).
Pushbutton	10-0007-3	Beige; Stop, Record Lock (With Spring #27-0005).
Pushbutton	10-0007-2	Brown; Stop, Record Lock
Knob	10-0009-1	Grey, Speed Control
Knob	10-0009-3	Beige, Speed Control
Knob	10-0009-2	Brown, Speed Control

WIRING DATA

General-use Unshielded Hook-up Wire ..... Use BELDEN No. 8530 (Solid) Available in Ten Colors
8524 (Stranded) Available in Ten Colors

Power Cord ..... Use BELDEN No. 1765-B (6 Ft. Length)
1725-K (7½ Ft. Length)

Low-Loss Shielded Lead (Interconnecting) .....Use BELDEN No. 8401

Phono Pick-up Arm Cable ..... Use BELDEN No. 8430 (Two Conductor - Twisted)

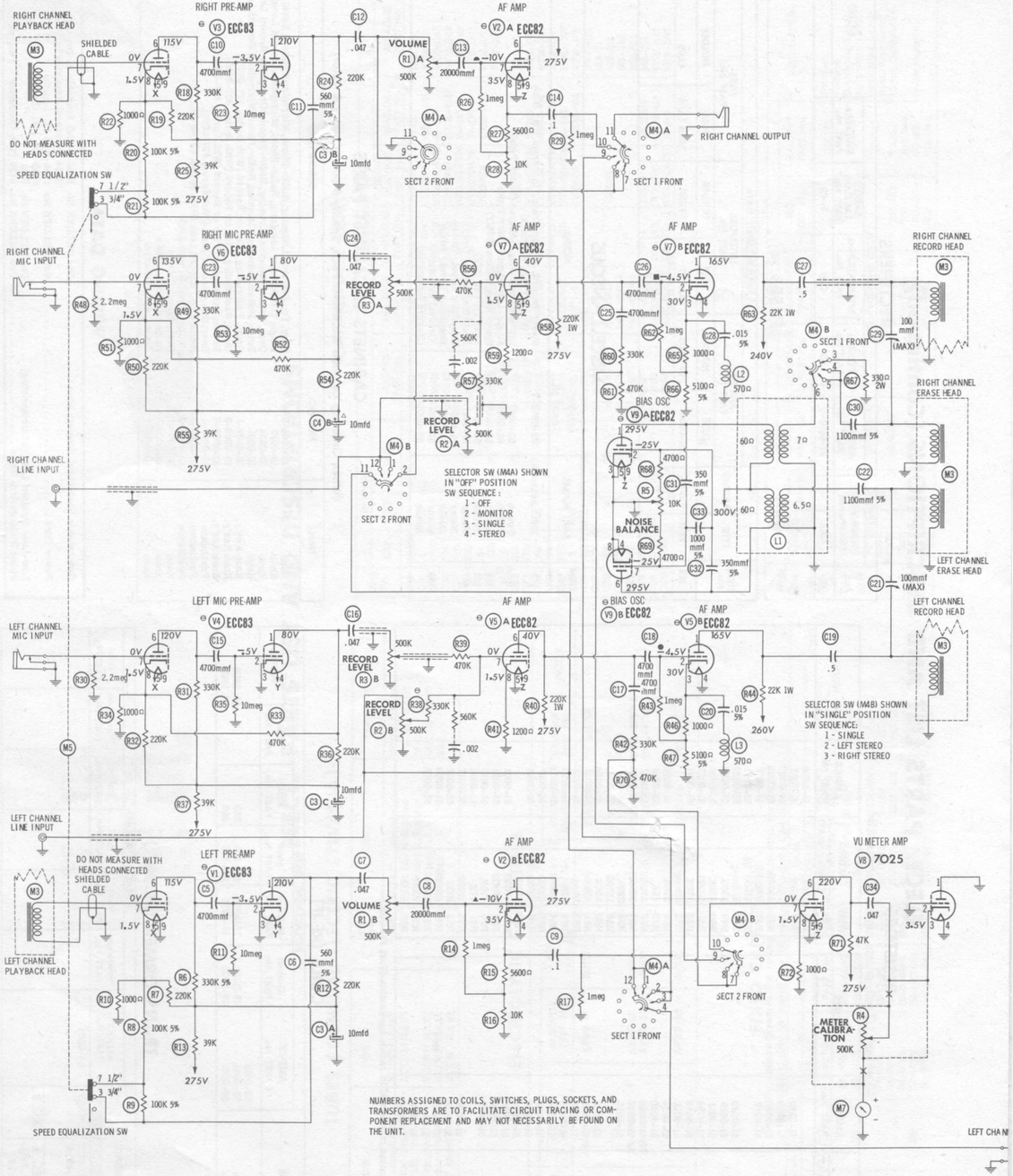

A PHOTOFACT STANDARD NOTATION SCHEMATIC

© Howard W. Sams & Co., Inc. 1959

RESISTANCE READINGS

ITEM	TUBE	Pin 1	Pin 2	Pin 3	Pin 4	Pin 5	Pin 6	Pin 7	Pin 8	Pin 9
V1	ECC83 12AX7	†265K	10meg	0Ω	4.5Ω	4.5Ω	†375K	1MF	1000Ω	0Ω
V2	ECC82 12AU7	†5800Ω	1meg	15K	0Ω	0Ω	†5800Ω	1meg	15K	.1Ω
V3	ECC83 12AX7	†265K	10meg	0Ω	4.5Ω	4.5Ω	†375K	1MF	1000Ω	6.5Ω
V4	ECC83 12AX7	†265K	10meg	0Ω	4.5Ω	4.5Ω	†375K	0Ω	1000Ω	6.5Ω
V5	ECC82 12AU7	†30K	1meg	6100Ω	0Ω	0Ω	†225K	200K	1200Ω	.1Ω
V6	ECC83 12AX7	†265K	10Meg	0Ω	4.5Ω	4.5Ω	†375K	0Ω	1000Ω	6.5Ω
V7	ECC82 12AU7	†30K	1meg	6100Ω	0Ω	0Ω	†225K	200K	1200Ω	.1Ω
V8	7025	0Ω	0Ω	180K	0Ω	0Ω	†53K	470K	1000Ω	.1Ω
V9	ECC82 12AU7	†400Ω	10K	0Ω	0Ω	0Ω	†400Ω	10K	0Ω	.1Ω
V10	6X4	360Ω	NC	¶	¶	NC	380Ω	¶		

ALL MEASUREMENTS TAKEN IN "PLAY" POSITION UNLESS OTHERWISE DESIGNATED.
† MEASURED FROM PIN 7 OF V10.
▲ MEASURED FROM PIN 3 OF V2.
▲ MEASURED FROM PIN 8 OF V2.
● MEASURED FROM PIN 3 OF V5.
■ MEASURED FROM PIN 3 OF V7.

1. DC voltage measurements taken with vacuum tube voltmeter; AC voltages measured at 1000 ohms per volt.
2. Socket connections are shown as bottom views.
3. Measured values are from socket pin to common negative.
4. Line voltage maintained at 117 volts for voltage readings.
5. Nominal tolerance of component values makes possible a variation of ±15% in voltage and resistance readings.
6. All controls at minimum, proper output load connected.

⊖ SEE PARTS LIST FOR ALTERNATE VALUE OR APPLICATION

DC COIL RESISTANCE VALUES UNDER ONE OHM NOT SHOWN ON SCHEMATIC DIAGRAM

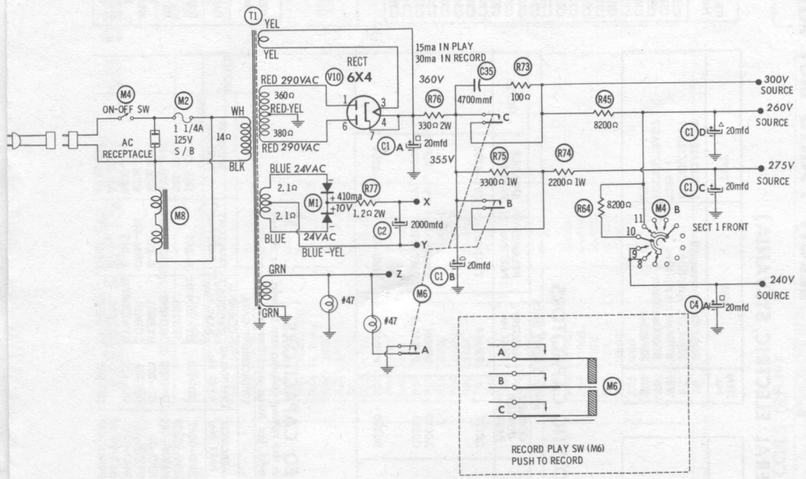

AMPEX MODELS 952, 954, 960

Pushbutton	10-0007-2
Knob	10-0009-1
Knob	10-0009-3
Knob	10-0009-2

Brown; Stop, Record Lock	
Grey, Speed Control	
Beige, Speed Control	
Brown, Speed Control	

WIRING DATA

General-use Unshielded Hook-up Wire	Use BELDEN No. 8530 (Solid) Available in Ten Colors 8524 (Stranded) Available in Ten Colors
Power Cord	Use BELDEN No. 1765-B (6 Ft. Length) 1725-K (7½ Ft. Length)
Low-Loss Shielded Lead (Interconnecting)	Use BELDEN No. 8401
Phono Pick-up Arm Cable	Use BELDEN No. 8430 (Two Conductor - Twisted)

TRANSFORMER (POWER)

REPLACEMENT DATA

ITEM No.	RATING		AMPEX PART No.	Halldorson PART No.	Merit PART No.	Ram PART No.	Stancor PART No.	Thordarson PART No.	Triad PART No.
	PRI.	SEC. 1	58-0003						
T1	117V @ .43A	580 VCT @ .030A							
		SEC. 2							
		6.3V @ .6A							
		SEC. 3							
		24 VCT @ .5A							
		SEC. 4							
		6.3V @ 1.7A							
		SEC. 5							